SECTION BRC
BRAKE CONTROL SYSTEM

CONTENTS

VDC/TCS/ABS

PRECAUTIONS

PFP:00001

Precautions for Supplemental Restraint System (SRS) “AIR BAG” and “SEAT BELT PRE-TENSIONER”

NFS000KN

The Supplemental Restraint System such as “AIR BAG” and “SEAT BELT PRE-TENSIONER”, used along with a front seat belt, helps to reduce the risk or severity of injury to the driver and front passenger for certain types of collision. This system includes seat belt switch inputs and dual stage front air bag modules. The SRS system uses the seat belt switches to determine the front air bag deployment, and may only deploy one front air bag, depending on the severity of a collision and whether the front occupants are belted or unbelted.
Information necessary to service the system safely is included in the SRS and SB section of this Service Manual.

WARNING:

- **To avoid rendering the SRS inoperative, which could increase the risk of personal injury or death in the event of a collision which would result in air bag inflation, all maintenance must be performed by an authorized NISSAN/INFINITI dealer.**
- **Improper maintenance, including incorrect removal and installation of the SRS, can lead to personal injury caused by unintentional activation of the system. For removal of Spiral Cable and Air Bag Module, see the SRS section.**
- **Do not use electrical test equipment on any circuit related to the SRS unless instructed to in this Service Manual. SRS wiring harnesses can be identified by yellow and/or orange harnesses or harness connectors.**

Precautions for Battery Service

NFS000KO

Before disconnecting the battery, lower both the driver and passenger windows. This will prevent any interference between the window edge and the vehicle when the door is opened/closed. During normal operation, the window slightly raises and lowers automatically to prevent any window to vehicle interference. The automatic window function will not work with the battery disconnected.

Precautions for Brake System

NFS0006H

- Recommended fluid is brake fluid “DOT 3”. Refer to MA-10, "RECOMMENDED FLUIDS AND LUBRICANTS" .
- Do not reuse drained brake fluid.
- Be careful not to splash brake fluid on painted surface of body. If brake fluid is splashed on painted surfaces of body immediately wipe it off with cloth and then wash it away with water.
- Do not use mineral oils such as gasoline or kerosene to clean. They will ruin rubber parts and cause improper operation.
- Use a flare nut wrench when removing flare nuts, and use a flare nut torque wrench when tighten brake tube flare nuts.
- Brake system is an important safety part. If a brake fluid leak is detected, always disassemble the affected part. If a malfunction is detected, replace part with a new one.
- Before working, turn ignition switch OFF and disconnect connectors of VDC/TCS/ABS control unit or the battery cable from the negative terminal.
- When installing brake piping, be sure to check torque.

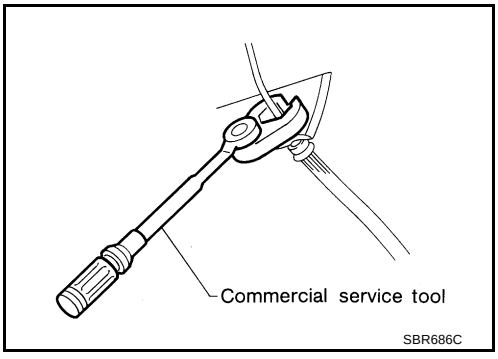

WARNING:

Clean brake pads and shoes with a waste cloth, then wipe with a dust collector.

Precautions for Brake Control

NFS0006I

- During ABS operation, brake pedal lightly vibrates and a mechanical sound may be heard. This is normal.
- Just after starting vehicle after turning ignition switch ON, brake pedal may vibrate or motor operating sound may be heard from engine compartment. This is a normal condition of operation check.
- Stopping distance may be longer than that of vehicles without ABS when vehicle drives on rough, gravel, or snow-covered (fresh, deep snow) roads.

- When an error is indicated by ABS or another warning lamp, collect all necessary information from customer (what symptoms are present under what conditions) and check for simple causes before starting diagnostic servicing. Besides electrical system inspection, check brake booster operation, brake fluid level, and fluid leaks.
- If tire size and type are used in an improper combination, or brake pads are not Genuine NISSAN parts, stopping distance or steering stability may deteriorate.
- If there is a radio, antenna, or antenna lead-in wire (including wiring) near VDC/TCS/ABS control unit, ABS function may have a malfunction or error.
- If aftermarket parts (car stereo, CD player, etc.) Have been installed, check for incidents such as harness pinches, open circuits, and improper wiring.
- If the following components are replaced with non-genuine components or converted, VDC OFF indicator lamp and SLIP indicator lamp may turn on or the VDC system may not operate properly. Components related to suspension (shock absorber, strut, spring, bush, etc.), Tires, wheels (exclude specified size), components related to brake (pad, rotor, caliper, etc.), Components related to engine (Muffler, ECM, etc.), Components related to body reinforcement (roll bar, Tower bar, etc.).
- Driving in the condition of breakage or excessive wear of suspension, tires or components related to brakes may cause VDC OFF indicator lamp and SLIP indicator lamp to turn on, and the VDC system may not operate properly.
- When the TCS or VDC is activated by sudden acceleration or sudden turn, some sound may occur if brake pedal is used. The sound is a result of the normal operation of the TCS and VDC.
- When driving on roads which have extreme slopes (such as mountainous roads) or high banks (such as sharp carves on a freeway), the VDC may not operate normally, or VDC OFF indicator lamp or VDC OFF indicator lamp and SLIP indicator lamp may turn on. However, this is not a malfunction, if normal operation can be resumed after restarting engine.
- Sudden turns (such as spin turns, acceleration turns), drifting, etc. When VDC function is OFF (VDC OFF switch ON) may cause yaw rate/side G sensor system to indicate a malfunction. However, this is not a malfunction if normal operation can be resumed after restarting engine. Then erase memory of self-diagnosis.

PREPARATION

PFP:00002

Special Service Tools

NFS0006J

The actual shapes of Kent-Moore tools may differ from those of special service tools illustrated here.

Tool number (Kent-Moore No.) Tool name		Description
ST3072000 (J-25405) Drift a: 77 mm (3.03 in) dia. b: 55.5 mm (2.19 in) dia.	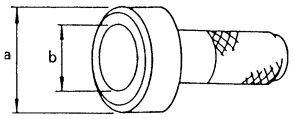 ZZC0760D	Installing rear sensor rotor.
ST27863000 (—) Drift a: 74.5 mm (2.93 in) dia. b: 62.5 mm (2.46 in) dia.	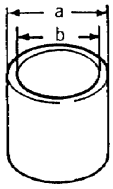 ZZA0832D	Installing rear sensor rotor.
KV40104710 (—) Drift a: 76.3 mm (3.00 in) dia. b: 67.9 mm (2.67 in) dia.	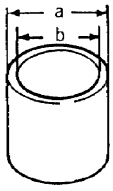 ZZA0832D	Installing rear sensor rotor.

Commercial Service Tools

NFS0006K

Tool name		Description
1. Flare nut crowfoot a: 10 mm (0.39 in)/ 12 mm (0.47 in) 2. Torque wrench	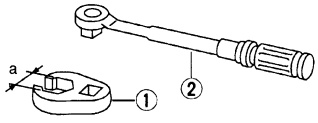 S-NT360	Installing each brake piping

ON-VEHICLE SERVICE

PFP:00000

Adjustment of Steering Angle Sensor Neutral Position

NFS0006L

In case of doing work that applies to the list below, make sure to adjust neutral position of steering angle sensor before running vehicle.

Situation	Adjustment of Steering Angle Sensor Neutral Position
Removing/Installing VDC/TCS/ABS control unit	–
Replacing VDC/TCS/ABS control unit	×
Removing/Installing steering angle sensor	×
Removing/Installing steering components	×
Removing/Installing suspension components	×
Change tires to new ones	–
Tire rotation	–
Adjusting wheel alignment	×

×: Required
–: Not required

CAUTION:
To adjust neutral position of steering angle sensor, make sure to use CONSULT-II.
(Adjustment cannot be done without CONSULT-II.)

1. Stop vehicle with front wheels in straight-ahead position.
2. Connect CONSULT-II and CONSULT-II CONVERTER to data link connector on vehicle, and turn ignition switch ON (do not start engine).
3. Touch the CONSULT-II screen in the order of “ABS”, “WORK SUPPORT” and “ST ANG SENSOR ADJUSTMENT”.
4. Touch “START”.

   CAUTION:
   Do not touch steering wheel while adjusting steering angle sensor.
5. After approximately 10 seconds, touch “END”. (After approximately 60 seconds, it ends automatically.)
6. Turn ignition switch OFF, then turn it ON again.

   CAUTION:
   Be sure to perform above operation.
7. Run vehicle with front wheels in straight-ahead position, then stop.

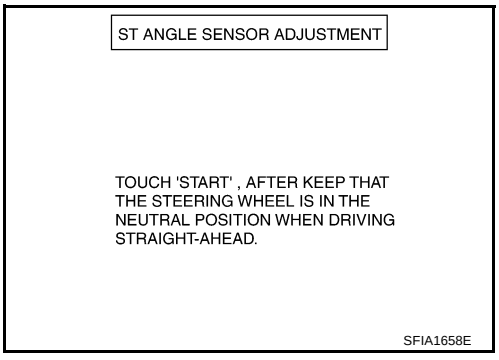

8. Select “DATA MONITOR”, “ECU INPUT SIGNALS”, and “STR ANGLE SIG” on CONSULT-II screen. Then make sure “STR ANGLE SIG” is within 0±2.5 deg. If value is more than specification, repeat steps 3 to 7.
9. Erase memory of VDC/TCS/ABS control unit and ECM. VDC/TCS/ABS control unit: Refer to BRC-26, "ERASE MEMORY" . ECM: Refer to EC-83, "TROUBLE DIAGNOSIS" .
10. Turn ignition switch OFF.

SYSTEM DESCRIPTION

PFP:00000

System Diagram

NFS0006R

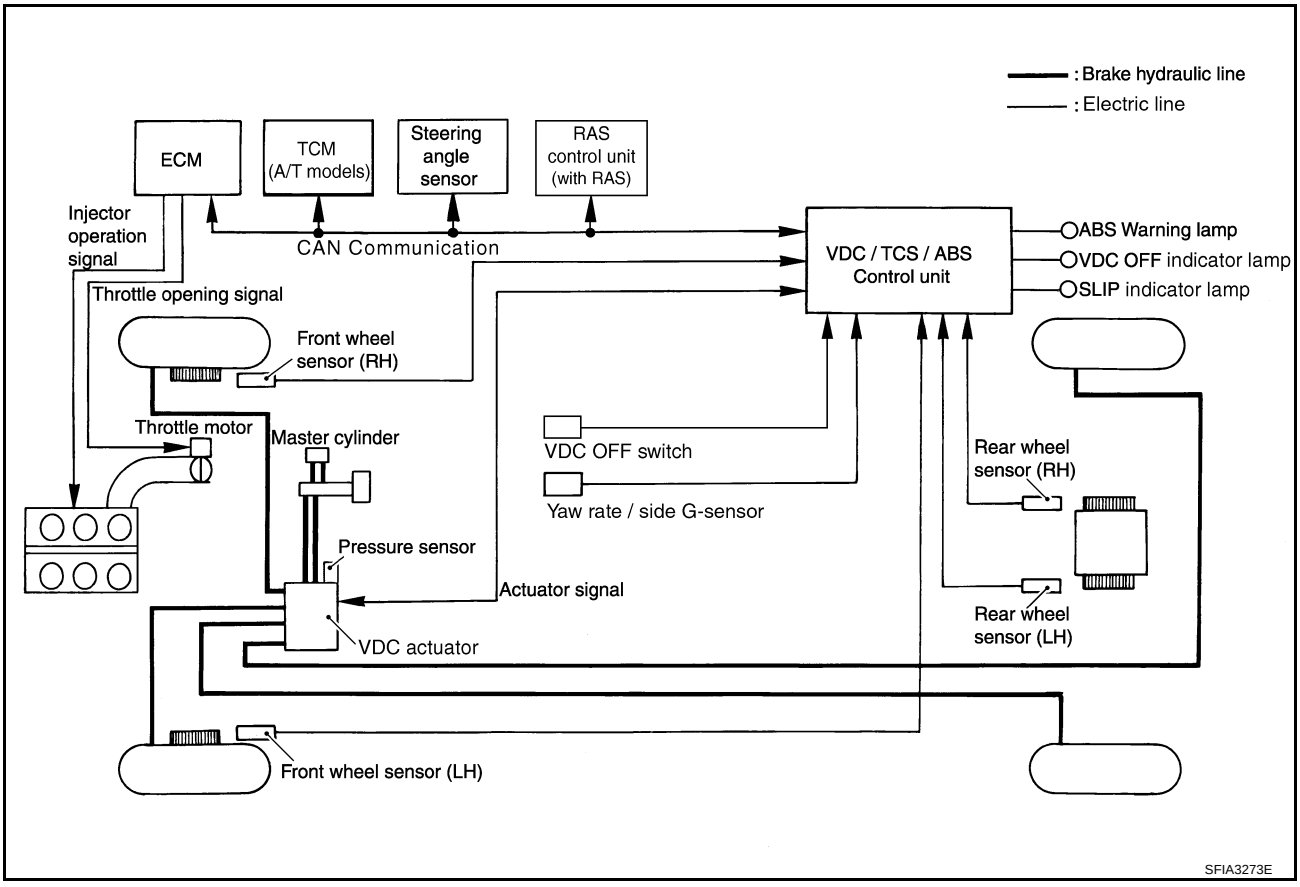

VDC Function

NFS000KA

- In addition to the TCS/ABS function, the driver steering amount and brake operation amount are detected from the steering angle sensor and pressure sensor, and the vehicle's driving status (amount of under-steering / over-steering) is determined from information from the yaw rate sensor/side G sensor, wheel sensor, etc., and this information is used to improve vehicle stability by controlling the braking and engine power to all four wheels.
- The SLIP indicator lamp flashes to inform the driver of VDC operation.
- During VDC operation, the body and brake pedal lightly vibrate and mechanical noises may be heard. This is normal.
- The ABS warning lamp, VDC OFF indicator lamp, and SLIP indicator lamp might turn on when the vehicle is subject to strong shaking or large vibration, such as when the vehicle is on a turn table or a ship while the engine is running. In this case, restart the engine on a normal road, and if the ABS warning lamp, VDC OFF indicator lamp, and SLIP indicator lamp turn off, there is no problem.

TCS Function

NFS000KB

- The wheel spin of the drive wheels is detected by the VDC/TCS/ABS control unit from the wheel speed signals from the four wheels, so if wheel spin occurs, the rear wheel right and left brake fluid pressure control and engine fuel cut are conducted while the throttle value is restricted to reduce the engine torque and decrease the amount of wheel spin. In addition, the degree the throttle is opened is controlled to achieve the optimum engine torque.
- Depending on road circumstances, the driver may have a sluggish feel. This is normal, because the optimum traction has the highest priority under TCS operation.
- TCS may be activated any time the vehicle suddenly accelerates, suddenly downshifts, or is driven on a road with a varying surface friction coefficient.
- During TCS operation, it informs a driver of system operation by flashing SLIP indicator lamp.

ABS Function

NFS000KC

- The Anti-Lock Brake System is a function that detects wheel revolution while braking, and it improves handling stability during sudden braking by electrically preventing 4 wheel lock. Maneuverability is also improved for avoiding obstacles.
- If the electrical system breaks down, then the Fail-Safe function starts, the ABS becomes inoperative, and the ABS warning lamp turns on.
- Electrical system diagnosis by CONSULT-II is available.

EBD Function

NFS000KD

- The Electronic Brake Distribution is a function that detects subtle slippages between the front and rear wheels during braking, and it improves handling stability by electronically controlling the Brake Fluid Pressure which results in reduced rear wheel slippage.
- In case of electrical system break down, the Fail-Safe function is activated, the EBD and ABS becomes inoperative, and the ABS warning lamp and brake warning lamp are turned on.
- Electrical system diagnosis by CONSULT-II is available.

Hydraulic Pressure Control System Diagram

NFS0006N

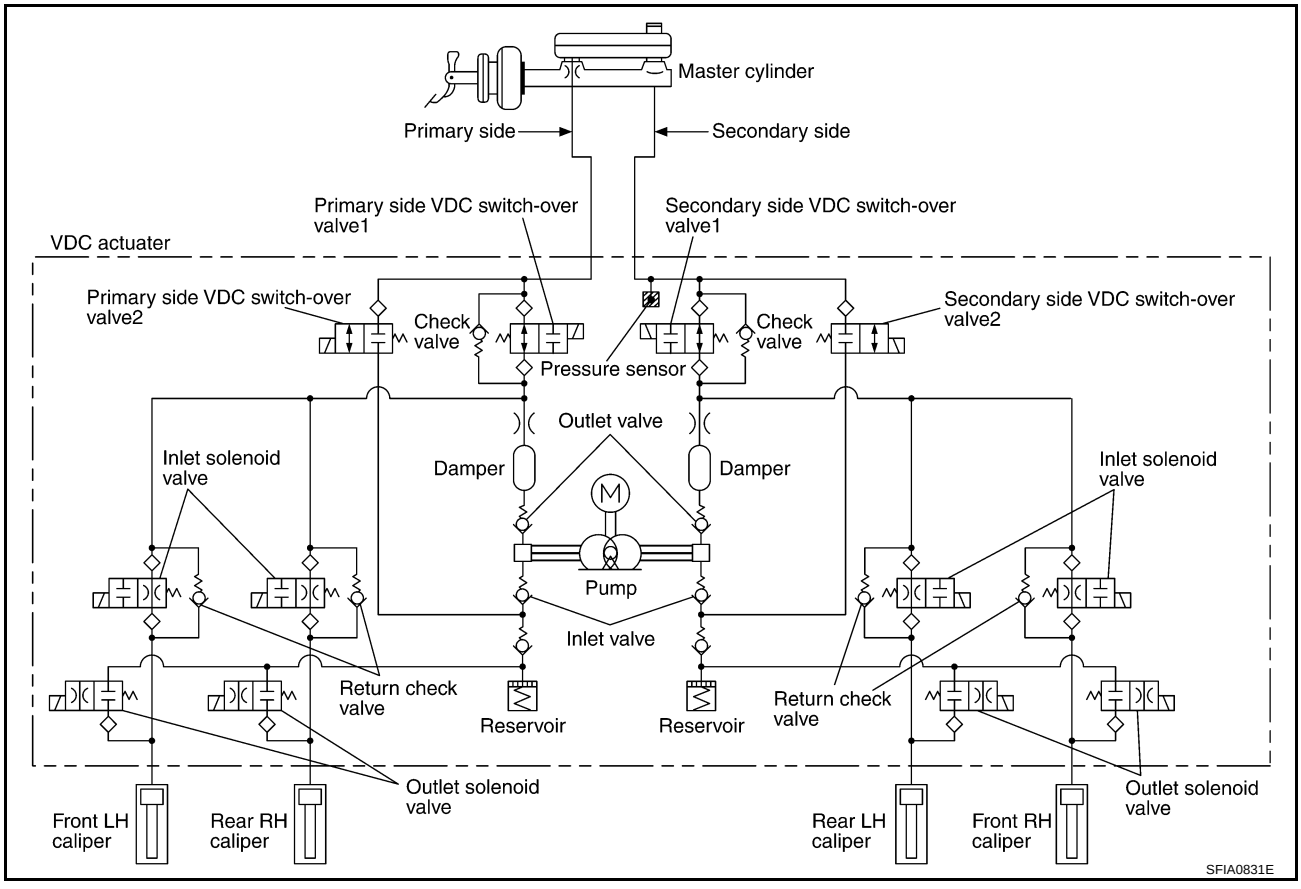

CAN Communication

NFS000KE

SYSTEM DESCRIPTION

CAN (Controller Area Network) is a serial communication line for real time application. It is an on-vehicle multiplex communication line with high data communication speed and excellent error detection ability. Many electronic control units are equipped onto a vehicle, and each control unit shares information and links with other control units during operation (not independent). In CAN communication, control units are connected with 2 communication lines (CAN H line, CAN L line) allowing a high rate of information transmission with less wiring. Each control unit transmits/receives data but selectively reads required data only. Refer to LAN-26, "CAN Communication Unit" .

TROUBLE DIAGNOSIS

PFP:00004

Fail-Safe Function

NFS000KL

VDC/TCS SYSTEM

In case of Throttle Control System trouble, the VDC OFF indicator lamp and SLIP indicator lamp are turned on, and the condition of the vehicle is the same as the condition of vehicles without VDC/TCS equipment. In case of trouble to the Throttle Control System, the ABS control continues to operate normally without VDC/TCS control.

CAUTION:

If the Fail-Safe function is activated, then perform the self diagnosis for VDC/TCS/ABS control system.

ABS, EBD SYSTEM

In case of the electrical problems with the ABS, the ABS warning lamp, VDC OFF indicator lamp and SLIP indicator lamp will turn on. In case of the electrical problem with the EBD, brake warning lamp, ABS warning lamp, VDC OFF indicator lamp and SLIP indicator lamp will turn on. Simultaneously, the VDC/TCS/ABS become one of the following conditions of the Fail-Safe function.

- For ABS trouble, only the EBD is activated and the condition of the vehicle is the same condition of vehicle without TCS/ABS equipment.

  NOTE:
  ABS self diagnosis sound may be heard. That is a normal condition because a self diagnosis for “Ignition switch ON” and “The first starting” are being performed.
- For EBD trouble, the EBD and ABS become inoperative, and the condition of the vehicle is the same as the condition of vehicles without TCS/ ABS, EBD equipment.

How to Perform Trouble Diagnoses

NFS0006T

BASIC CONCEPT

- Most important point to perform diagnostic is to understand systems (control and mechanism) in vehicle thoroughly.
- It is also important to clarify customer complaints before inspection.
  First of all, reproduce symptom, and understand it fully.
  Ask customer about his/her complaints carefully. In some cases, they will be necessary to check symptom by driving vehicle with customer.

  NOTE:
  Customers are not professionals. Do not assume “maybe customer means...” or “maybe customer mentioned this symptom”.

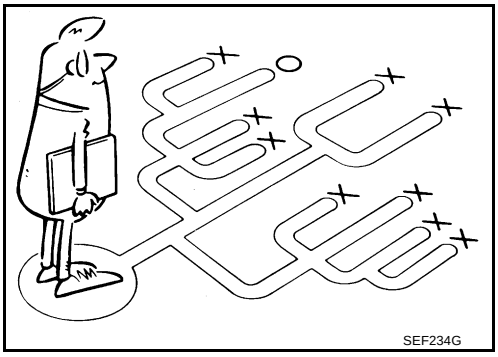
SEF234G

- It is essential to check symptoms right from beginning in order to repair a malfunction completely.
  For an intermittent malfunction, it is important to reproduce symptom based on interview with customer and past examples. Do not perform inspection on ad hoc basis. Most intermittent malfunctions are caused by poor contacts. In this case, it will be effective to shake suspected harness or connector by hand. When repairs are performed without any symptom check, no one can judge if malfunction has actually been eliminated.
- After diagnostic, make sure to perform “ERASE MEMORY”. Refer to BRC-26, "ERASE MEMORY" .
- For an intermittent malfunction, move harness or harness connector by hand to check poor contact or false open circuit.

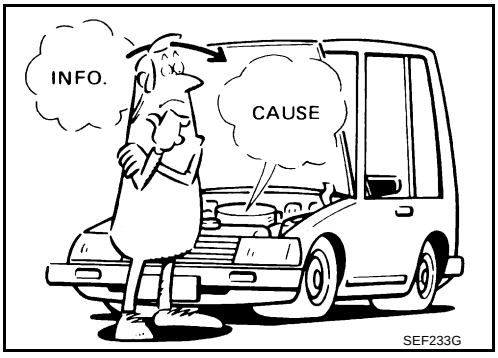

SEF233G

- Always read “GI General Information” to confirm general precautions. Refer to GI-3, "PRECAUTIONS" .

DIAGNOSIS FLOW CHART

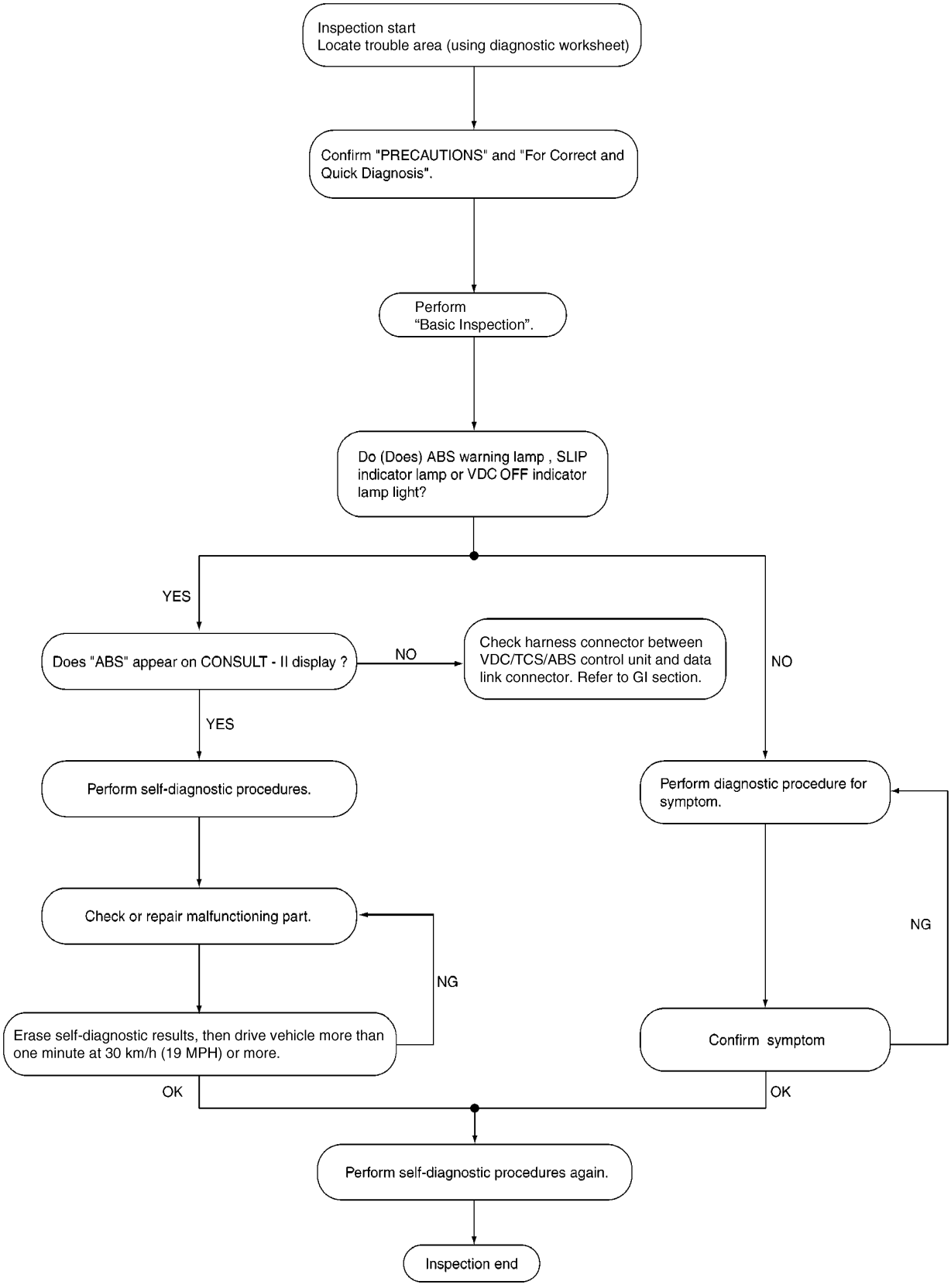

SFIA3272E

ASKING COMPLAINTS

- Complaints against malfunction vary depending on each person. It is important to clarify customer complaints.
- Ask customer about what symptoms are present and under what conditions. Use information to reproduce symptom while driving.
- It is also important to use diagnostic sheet so as not to miss information.

KEY POINTS

WHAT ..... Vehicle model
WHEN ..... Date, Frequencies
WHERE ..... Road conditions
HOW ..... Operating conditions, Weather conditions, Symptoms

SBR339B

EXAMPLE OF DIAGNOSIS SHEET

Customer name MR/MS	Model & Year		VIN
Engine #	Trans.		Mileage
Incident Date	Manuf. Date		In Service Date
Symptoms	☐ Noise and vibration (from engine compartment) ☐ Noise and vibration (from axle)	☐ Warning / Indicator activate	☐ Firm pedal operation Large stroke pedal operation
	☐ TCS does not work (Rear wheels slip when accelerating)	☐ ABS does not work (Wheels lock when braking)	☐ Lack of sense of acceleration
Engine conditions	☐ When starting ☐ After starting		
Road conditions	☐ Low friction road (☐Snow ☐Gravel ☐Other) ☐ Bumps / potholes		
Driving conditions	☐ Full-acceleration ☐ High speed cornering ☐ Vehicle speed: Greater than 10 km/h (6 MPH) ☐ Vehicle speed: 10 km/h (6 MPH) or less ☐ Vehicle is stopped		
Applying brake conditions	☐ Suddenly ☐ Gradually		
Other conditions	☐ Operation of electrical equipment ☐ Shift change ☐ Other descriptions		

SFIA3265E

Component Parts Location

NFS0006U

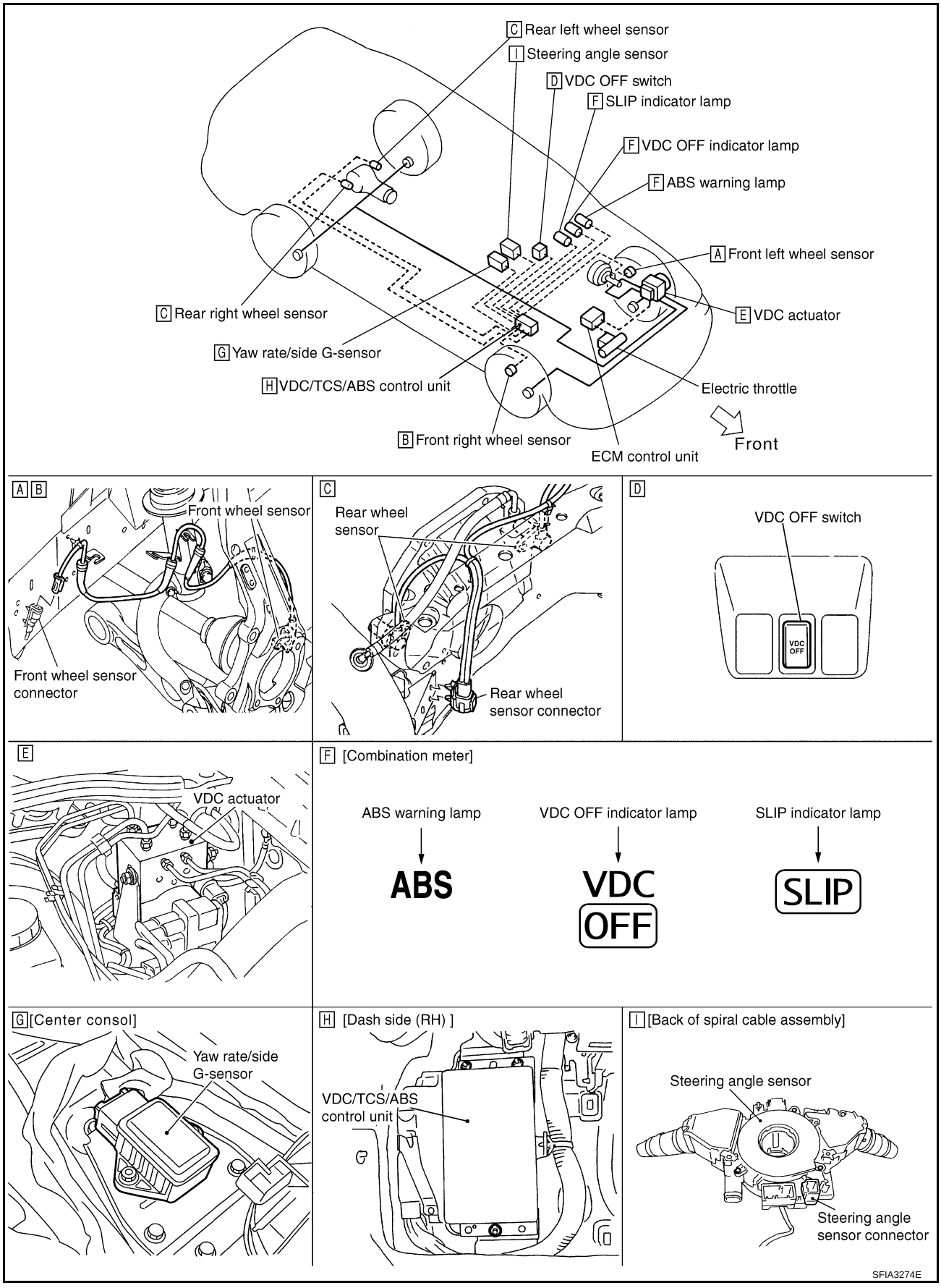

Schematic

NFS0006V

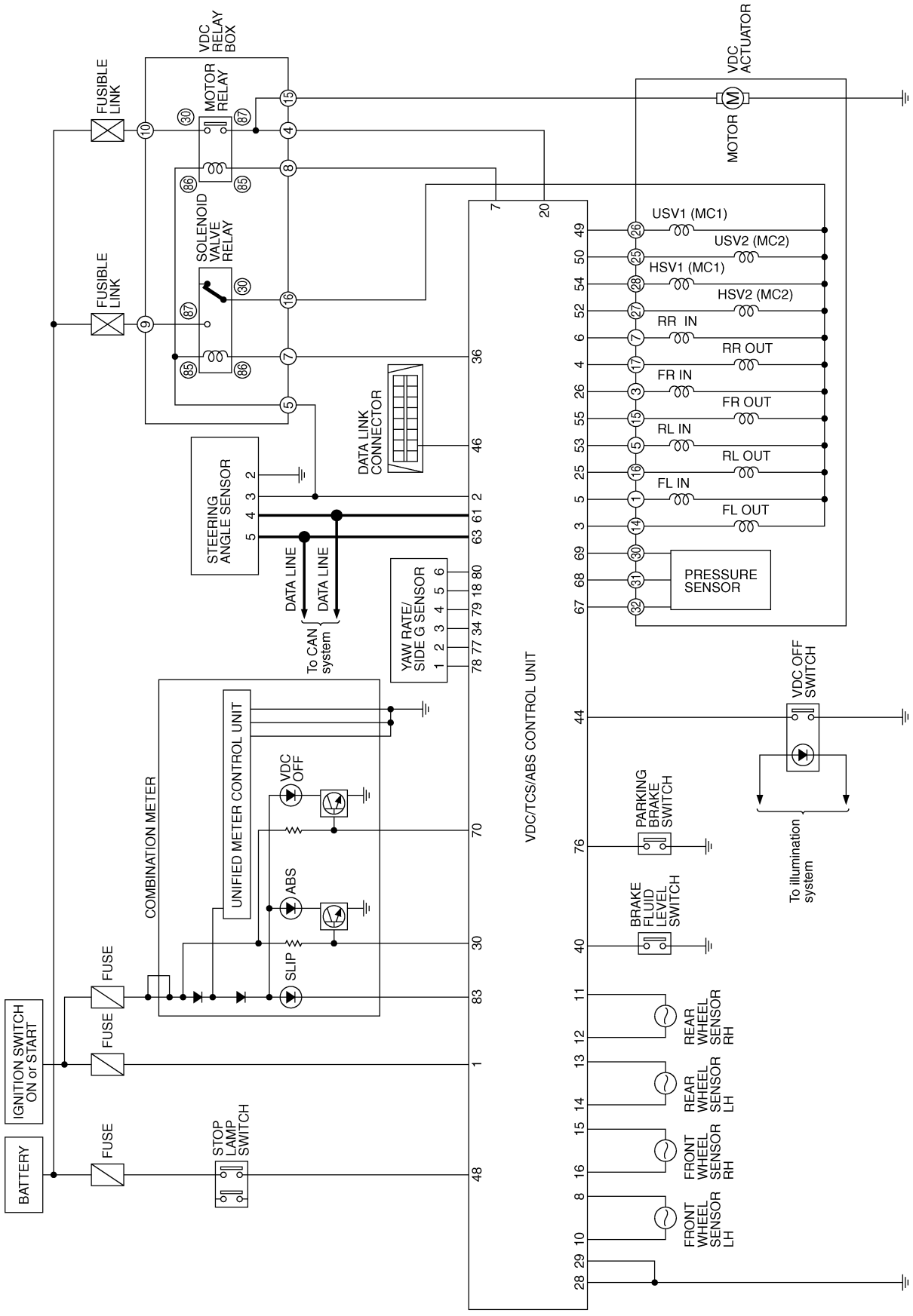

TFWM0135E

Wiring Diagram — VDC —

NFS0006W

BRC-VDC-01

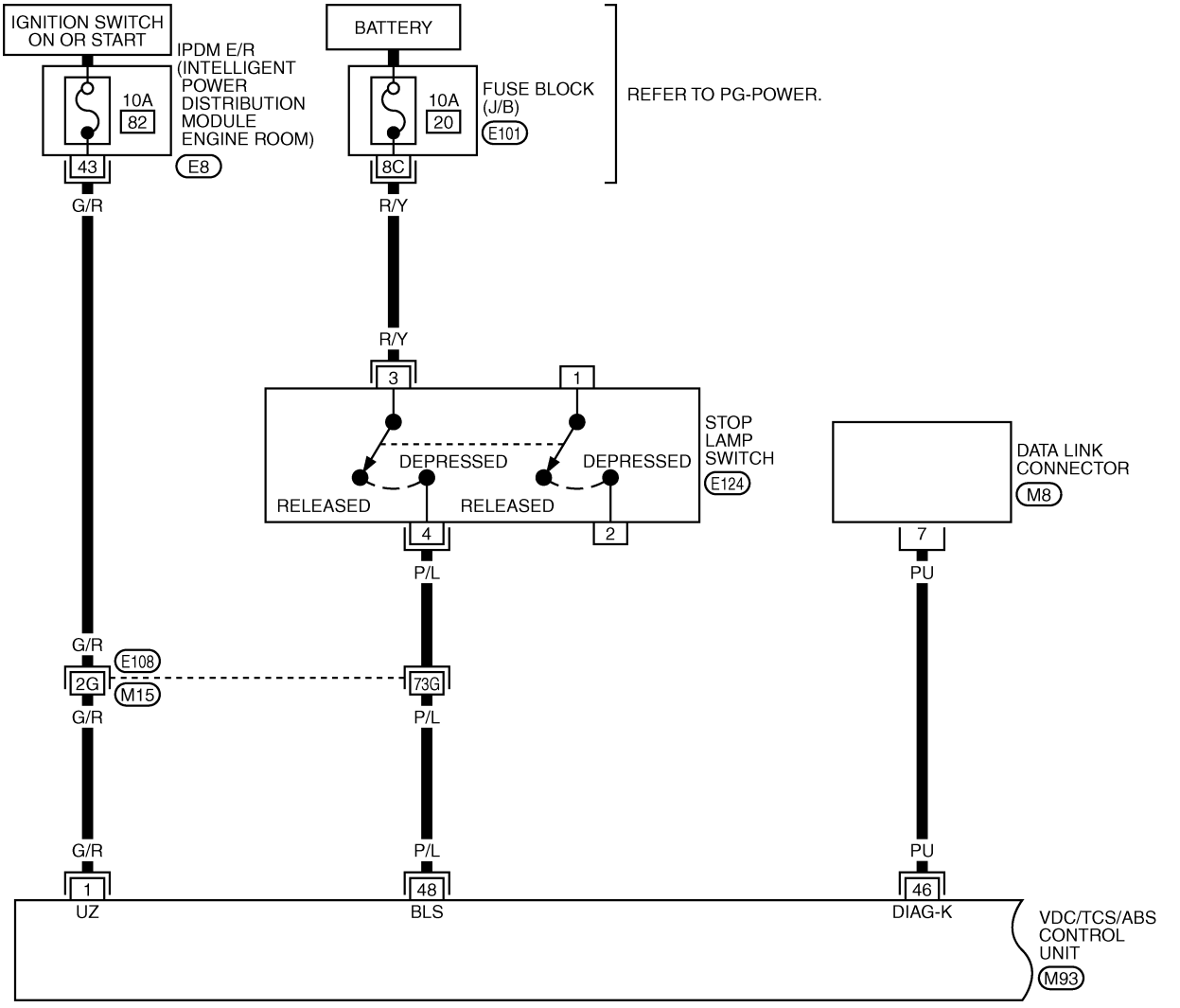

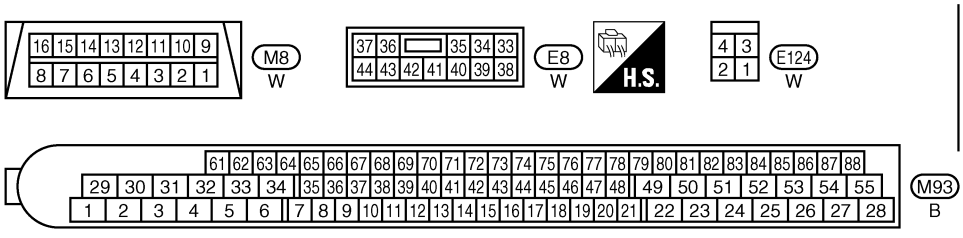

REFER TO THE FOLLOWING.

E108 -SUPER MULTIPLE JUNCTION (SMJ)

E101 -FUSE BLOCK-JUNCTION BOX (J/B)

TFWM0136E

BRC-VDC-02

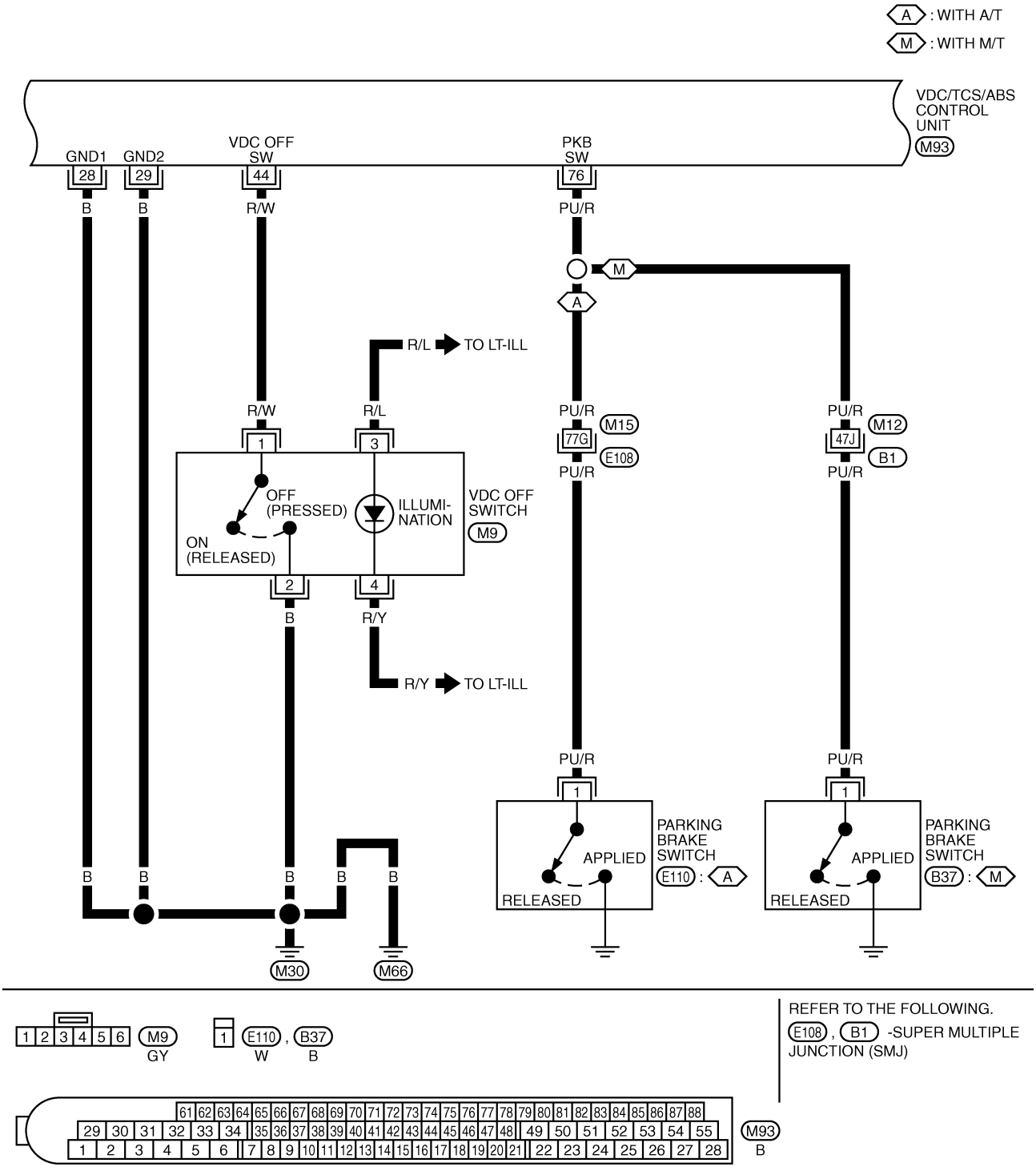
A : WITH A/T
M : WITH M/T
VDC/TCS/ABS CONTROL UNIT
M93
GND1
GND2
VDC OFF SW
PKB SW
28
29
44
76
B
B
R/W
PU/R
M
A
R/L
TO LT-ILL
R/W
R/L
PU/R
M15
77G
E108
PU/R
PU/R
M12
47J
B1
PU/R
1
3
OFF (PRESSED)
ILLUMI-NATION
VDC OFF SWITCH
M9
ON (RELEASED)
2
4
B
R/Y
R/Y
TO LT-ILL
PU/R
PU/R
1
1
PARKING BRAKE SWITCH
APPLIED
E110 : A
RELEASED
PARKING BRAKE SWITCH
APPLIED
B37 : M
RELEASED
B
B
B
B
B
M30
M66
1 2 3 4 5 6
M9
GY
1
E110 , B37
W
B
REFER TO THE FOLLOWING.
E108 , B1 -SUPER MULTIPLE JUNCTION (SMJ)
M93
B
TFWM0137E

BRC-VDC-03

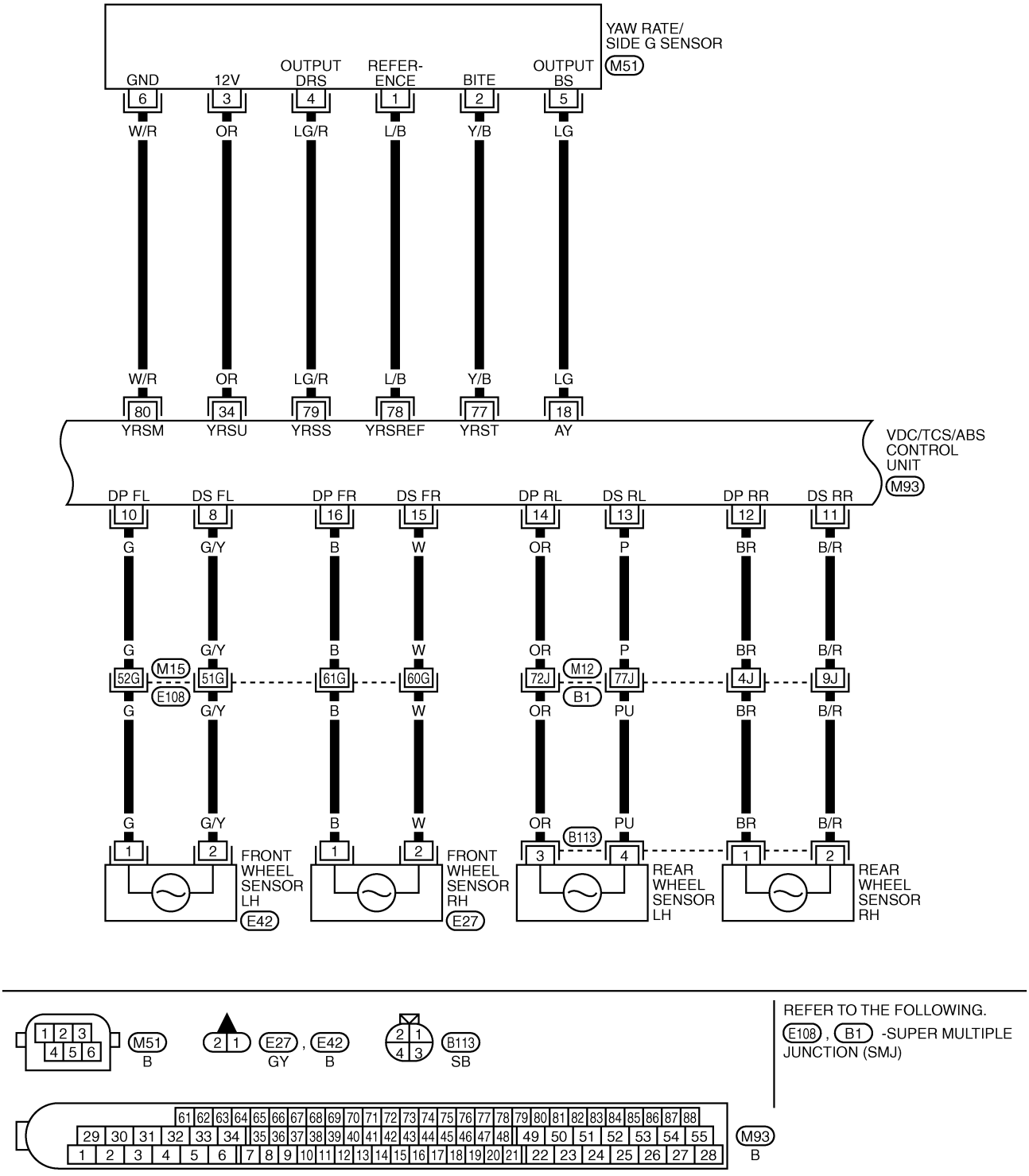

TFWM0138E

BRC-VDC-04

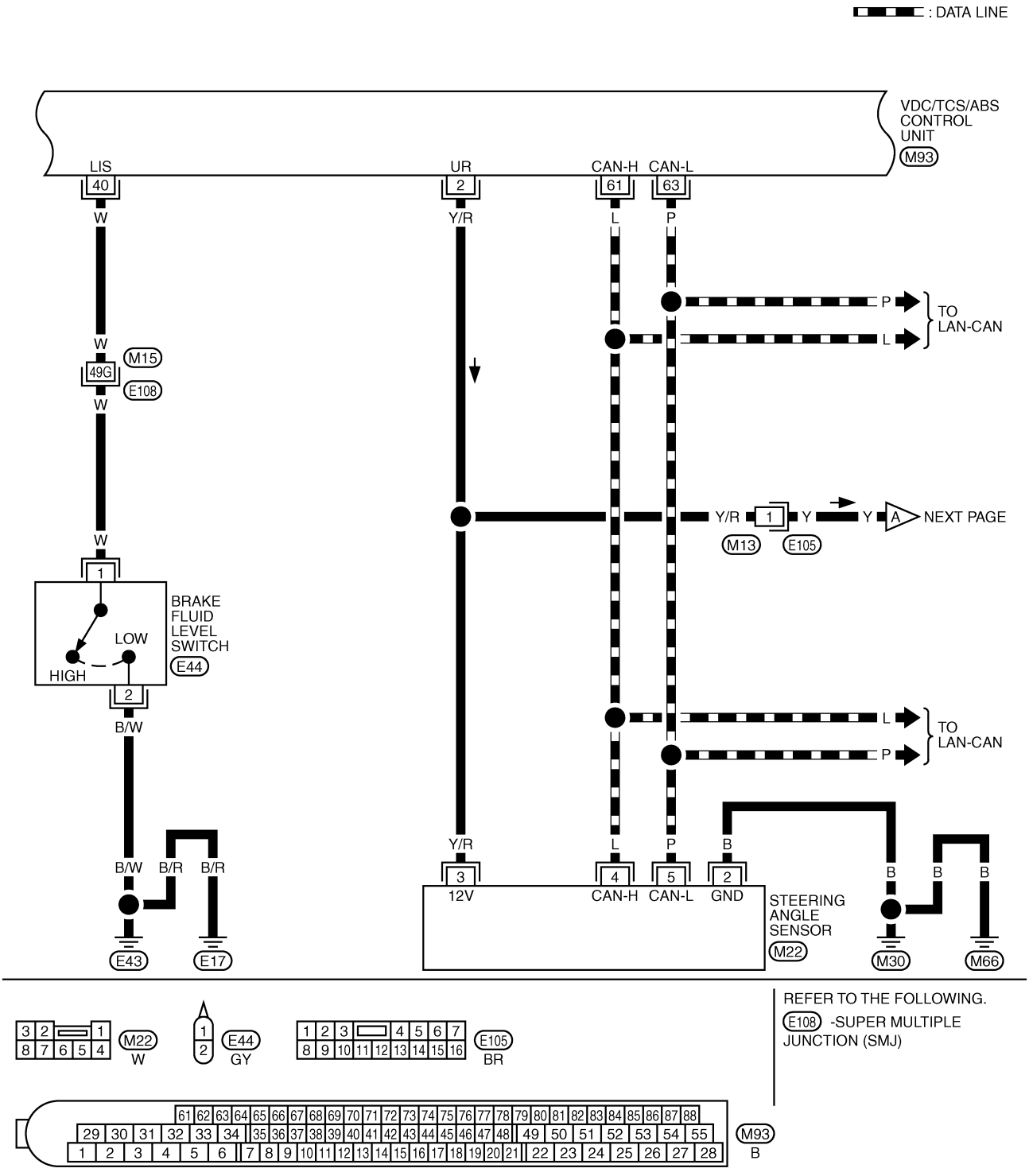

TFWM0139E

BRC-VDC-05

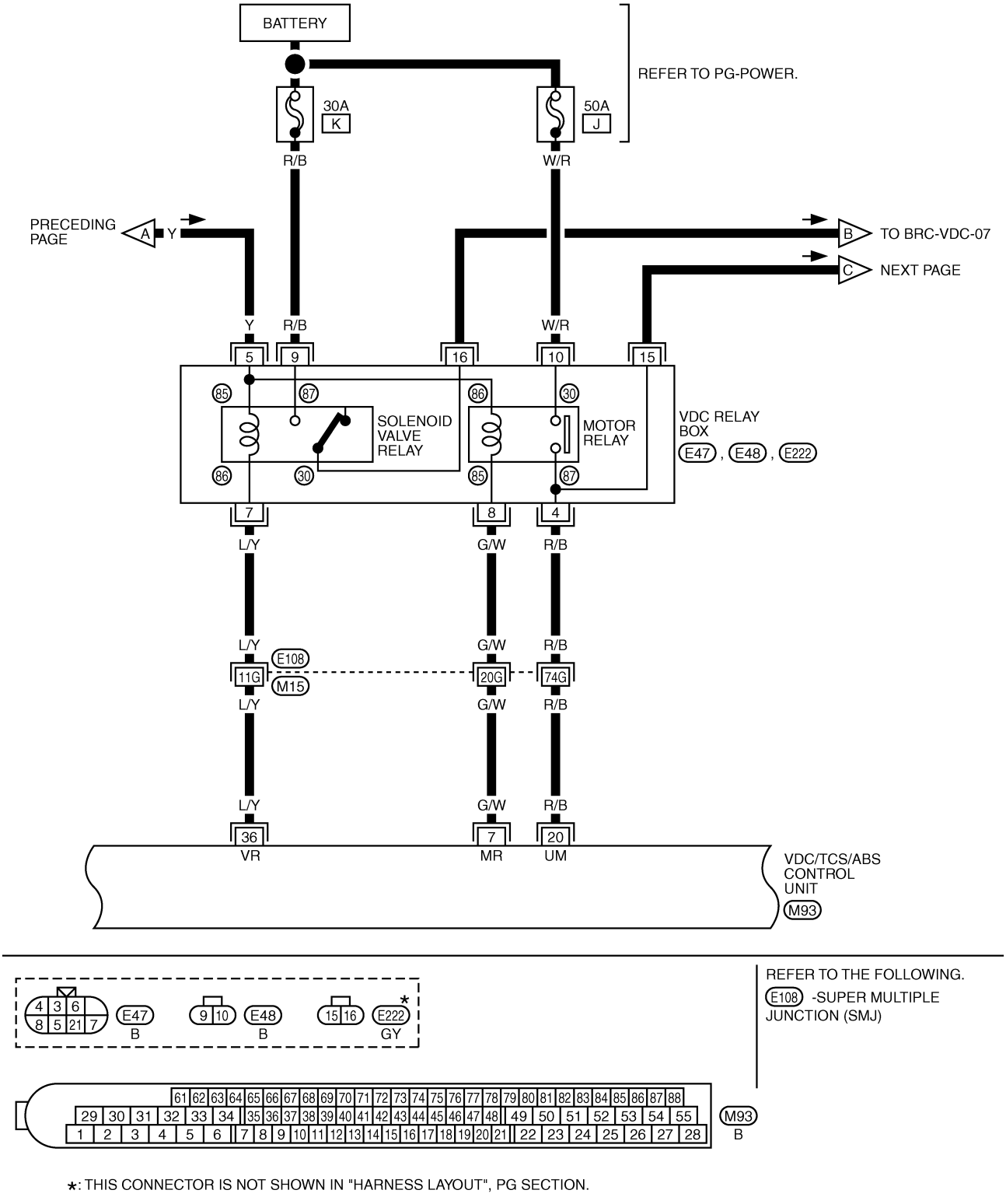

*: THIS CONNECTOR IS NOT SHOWN IN "HARNESS LAYOUT", PG SECTION.

TFWM0140E

BRC-VDC-06

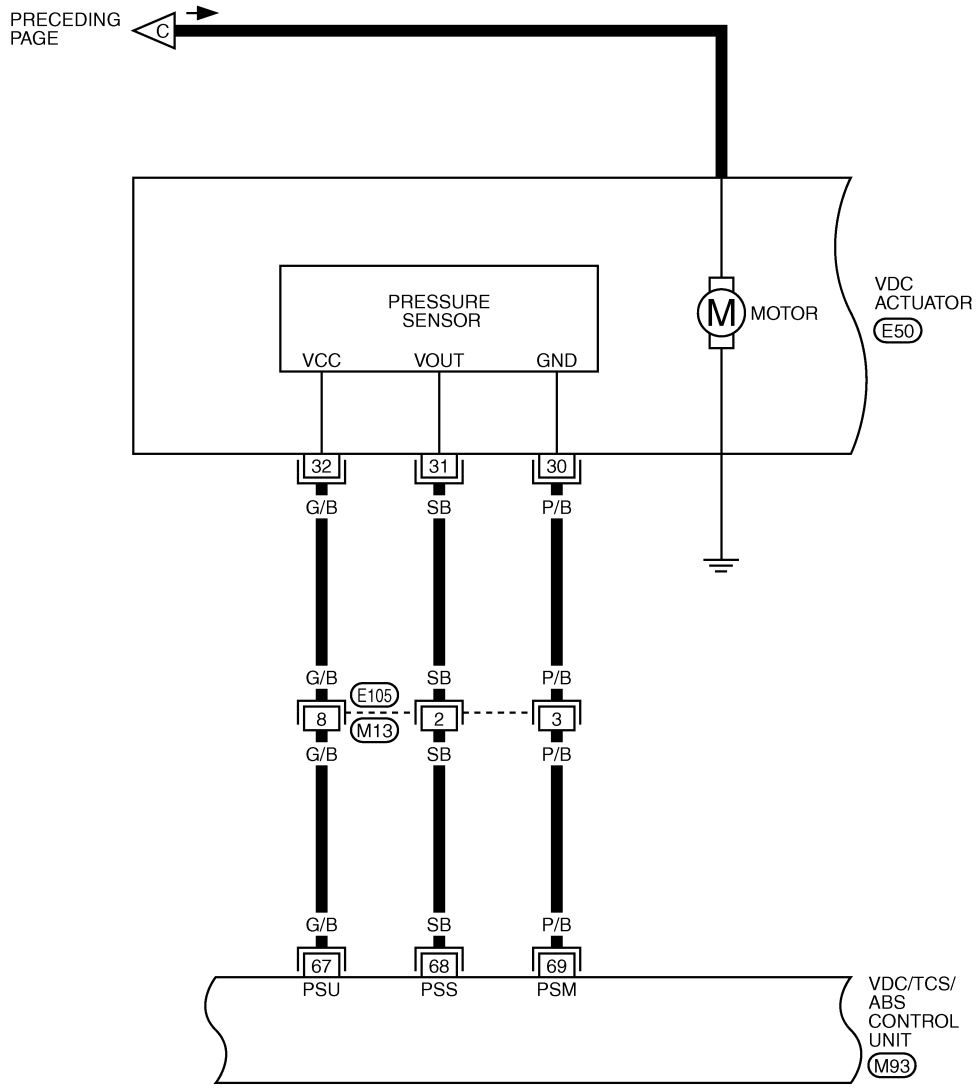

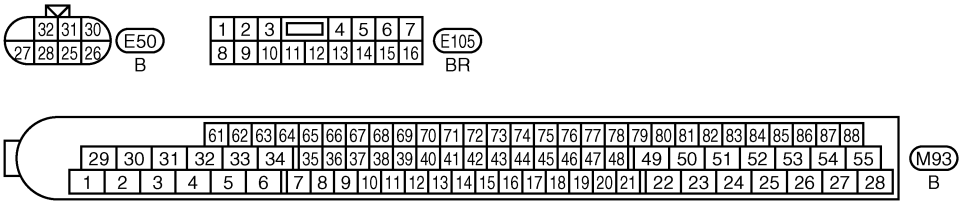

TFWM0141E

BRC-VDC-07

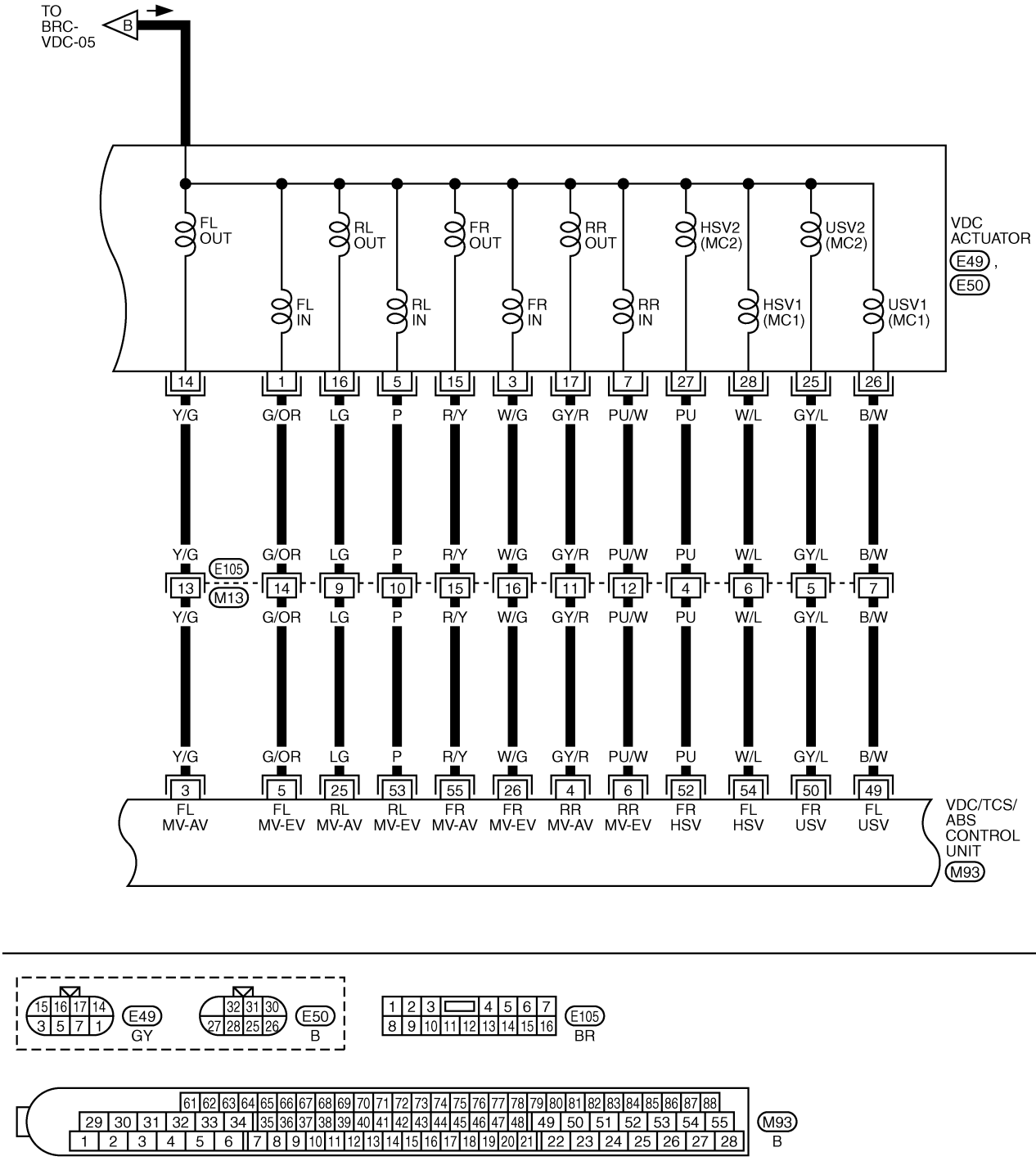

TFWM0142E

BRC-VDC-08

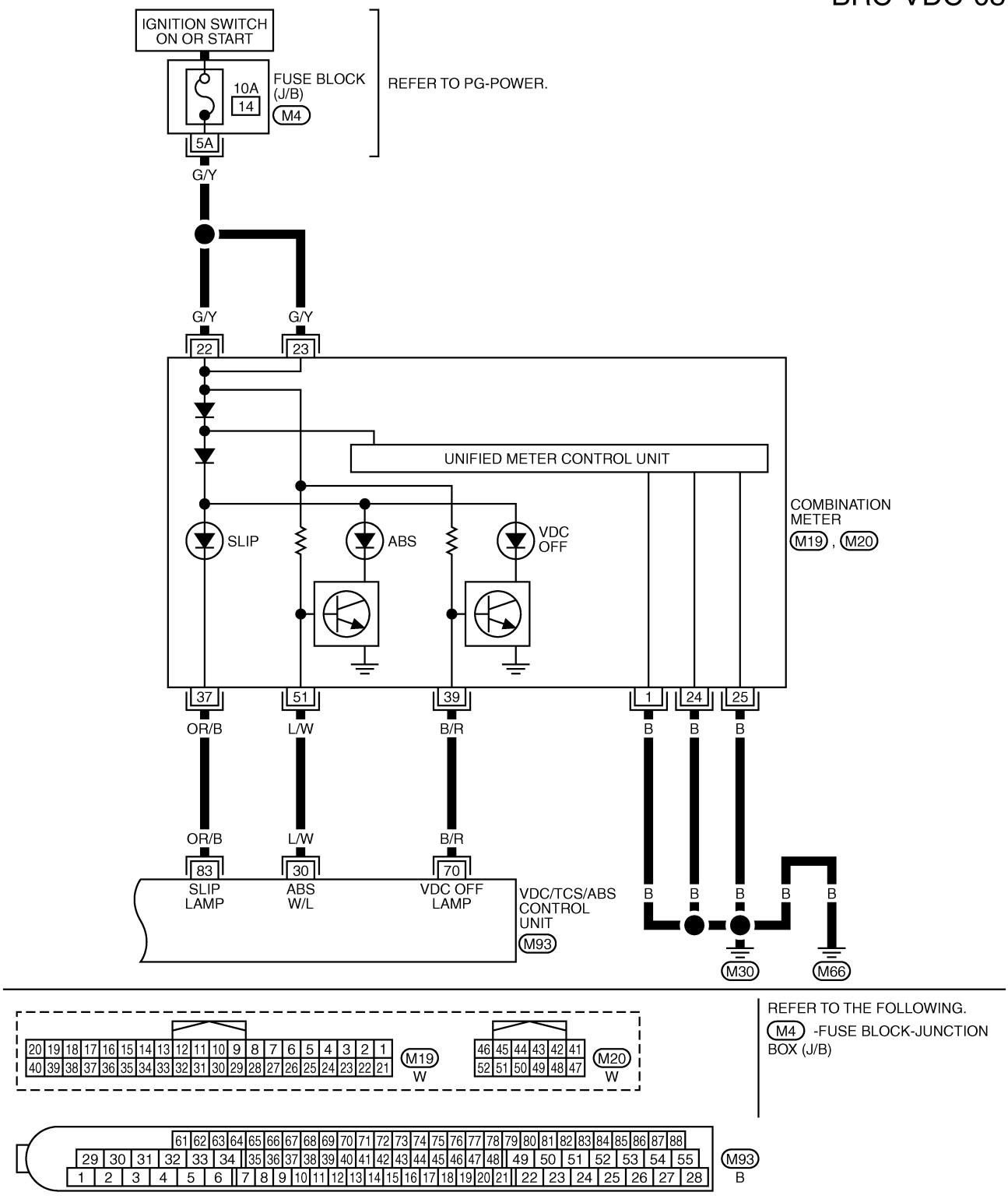

TFWM0143E

Control Unit Input/Output Signal Standard

NFS0006X

STANDARDS BY CONSULT-II

CAUTION:

Items displayed are data calculated by control unit and may indicate normal operation even if output circuit (harness) is open or shorted.

Monitor item	Contents	DATA MONITOR		Check item
		Condition	Reference value in normal operation	
SLCT LVR POSI	Shift position determined by the A/T PNP switch signal	Indicate each shift position (M/T models normally remain at ##)		BRC-49, "When "SHIFT POSITION ERROR" Appears in Self-Diagnostic results Display (A/T Models)"
GEAR	Gear position determined by TCM	1:1st gear (M/T models: normally remain at 1) 2:2nd gear 3:3rd gear 4:4th gear 5:5th gear		—
FR LH SENSOR FR RH SENSOR RR LH SENSOR RR RH SENSOR	Wheel speed	Vehicle stopped	0 [km/h]	BRC-36, "Wheel Sensor System"
		Vehicle running (Note 1)	Almost in accordance with speedometer display (within ±10 %)	
ACCEL POS SIG	Throttle actuator opening/closing is displayed (linked with accelerator pedal).	Accelerator pedal not depressed (ignition switch is ON)	0 %	Communication circuit between VDC/TCS/ABS control unit and ECM
		Depress accelerator pedal (ignition switch is ON)	0 - 100 %	
ENGINE RPM	With engine running	With engine stopped	0 rpm	Engine speed signal circuit
		Engine running	Almost in accordance with tachometer display	
STR ANGLE SIG	Steering angle detected by steering angle sensor	Straight-ahead	Approx. 0°	BRC-39, "Steering Angle Sensor System"
		Steering wheel turned	–720 to 720°	
YAW RATE SEN	Yaw rate detected by yaw rate sensor	Vehicle stopped	Approx. 0 d/s	BRC-41, "Yaw Rate/Side G Sensor System"
		Vehicle running	–70 to 70 d/s	
SIDE G SENSOR	Transverse G detected by side G sensor	Vehicle stopped	Approx. 0 m/s^2	
		Vehicle running	–24.3 to 24.1 m/s^2	
PRESS SENSOR	Brake fluid pressure detected by pressure sensor	With ignition switch turned ON and brake pedal released	Approx. 0 bar	BRC-38, "Pressure Sensor System"
		With ignition switch turned ON and brake pedal depressed	–40 to 300 bar	
BATTERY VOLT	Battery voltage supplied to VDC/TCS/ABS control unit	Ignition switch ON	10 - 16 V	BRC-48, "VDC/TCS/ABS Control Unit Power and Ground System"
STOP LAMP SW	Brake pedal operation	Brake pedal depressed	ON	BRC-47, "Stop Lamp Switch System"
		Brake pedal not depressed	OFF	
PARK BRAKE SW	Parking brake condition	Parking brake operated	ON	Parking brake switch circuit
		Parking brake not operated	OFF	

Monitor item	Contents	DATA MONITOR		Check item
		Condition	Reference value in normal operation	
OFF SW	VDC OFF switch ON/OFF condition	VDC OFF switch ON (When VDC OFF indicator lamp is ON)	ON	BRC-52, "VDC OFF SWITCH"
		VDC OFF switch OFF (When VDC OFF indicator lamp is OFF)	OFF	
ABS WARN LAMP	ABS warning lamp ON condition (Note 2)	ABS warning lamp ON	ON	ABS warning lamp harness
		ABS warning lamp OFF	OFF	
MOTOR RELAY	Operation condition of motor and motor relay	When motor relay and motor are operating	ON	BRC-44, "Actuator Motor and Motor Relay System"
		When motor relay and motor are not operating	OFF	
ACTUATOR RLY	Solenoid valve relay operation condition	When solenoid valve relay is operating	ON	BRC-43, "Solenoid and VDC Change-Over Valve System"
		When solenoid valve relay is not operating	OFF	
OFF LAMP	VDC OFF indicator lamp condition (Note 2)	When VDC OFF indicator lamp is ON	ON	VDC OFF indicator lamp circuit
		When VDC OFF indicator lamp is OFF	OFF	
SLIP LAMP	SLIP indicator lamp condition (Note 2)	When SLIP indicator lamp is ON	ON	SLIP indicator lamp circuit
		When SLIP indicator lamp is OFF	OFF	
IN ABS S/V OUT ABS S/V	Solenoid valve operation	Actuator (solenoid) is active (“ACTIVE TEST” with CONSULT-II) or solenoid valve relay is inactive (in fail-safe mode).	ON	BRC-43, "Solenoid and VDC Change-Over Valve System"
		When actuator (solenoid) is not active and solenoid valve relay is active (ignition switch ON).	OFF	
USV HSV	VDC switch-over valve condition	When actuator (switch-over valve) is active (“ACTIVE TEST” with CONSULT-II) or actuator relay is inactive (when in fail-safe mode).	ON	
		When actuator (switch-over valve) is not active and actuator relay is active (ignition switch ON).	OFF	
V/R OUTPUT	Actuator relay activated (ON/OFF)	When actuator relay is active (engine is running).	ON	BRC-46, "Actuator Relay System"
		When actuator relay is not active (before engine starts and in fail-safe mode).	OFF	
M/R OUTPUT	Actuator motor and motor relay condition (ON/OFF)	When actuator motor and motor relay are active (“ACTIVE TEST” with CONSULT-II).	ON	
		When the actuator motor and motor relay are not operating	OFF	

Monitor item	Contents	DATA MONITOR		Check item
		Condition	Reference value in normal operation	
FLUID LEV SW	ON/OFF condition of brake fluid level switch	When brake fluid level switch ON	ON	BRC-50, "Brake Fluid Level Switch System"
		When brake fluid level switch OFF	OFF	
FAIL SIGNAL	Fail signal condition	VDC fail TCS fail ABS fail EBD fail	OFF	VDC system TCS system ABS system EBD system

Note 1: Confirm tire pressure is normal.
Note 2: ON/OFF timing of warning lamp and indicator lamp. Refer to BRC-35, "INSPECTION OF ABS WARNING LAMP, VDC OFF INDICATOR LAMP AND SLIP INDICATOR LAMP" .

CONSULT-II Functions (VDC/TCS/ABS)

NFS0006Y

CONSULT-II MAIN FUNCTION

CONSULT-II can display each diagnostic item using the diagnostic test modes shown following.

Diagnostic test mode	Function	Reference
WORK SUPPORT	This mode enables a technician to adjust some devices faster and more accurately by following the indications on CONSULT-II.	BRC-6, "Adjustment of Steering Angle Sensor Neutral Position"
SELF-DIAG RESULTS	Self-diagnostic results can be read and erased quickly.	BRC-26, "Self-Diagnosis"
DATA MONITOR	Input/Output data in the VDC/TCS/ABS control unit can be read.	BRC-29, "Data Monitor"
CAN DIAG SUPPORT MNTR	The results of transmit/receive diagnosis of communication can be read.	LAN-15, "CAN Diagnostic Support Monitor"
ACTIVE TEST	Diagnostic Test Mode in which CONSULT-II drives some actuators apart from the VDC/TCS/ABS control unit and also shifts some parameters in a specified range.	BRC-31, "Active Test"
FUNCTION TEST	Performed by CONSULT-II instead of a technician to determine whether each system is “OK” or “NG”.	Separate volume ″CONSULT-II OPERATION MANUAL (FUNCTION TEST)″
ECU PART NUMBER	VDC/TCS/ABS control unit part number can be read.	—

CONSULT-II Basic Operation Procedure

NFS000KP

1. Turn ignition switch OFF.
2. Connect CONSULT-II and CONSULT-II CONVERTER to the data link connector.

   CAUTION:
   If CONSULT-II is used with no connection of CONSULT-II CONVERTER, malfunctions might be detected in self-diagnosis depending on control unit which carry out CAN communication.
3. Turn ignition switch ON.

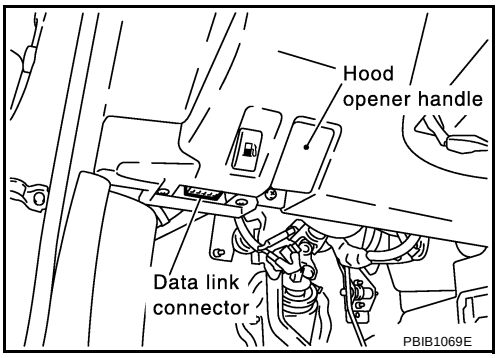

4. Touch “START (NISSAN BASED VHCL)”.

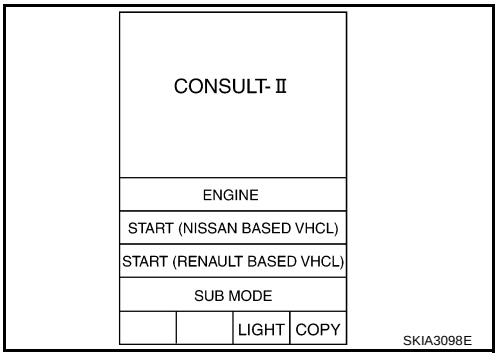

5. Touch “ABS” in the “SELECT SYSTEM” screen.
   If “ABS” is not indicated, go to GI-39, "CONSULT-II Data Link Connector (DLC) Circuit" .

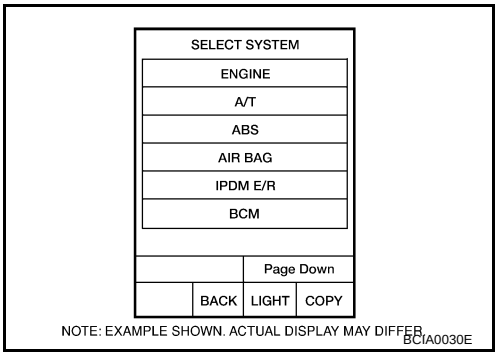

6. Select the required diagnostic location from the “SELECT SYSTEM” screen.
   For further information, see the CONSULT-II Operation Manual.

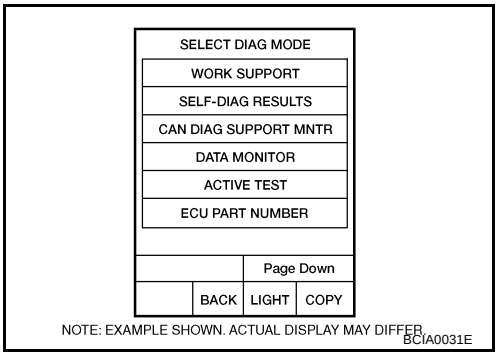

Self-Diagnosis

NFS000KQ

DESCRIPTION

If a malfunction is detected in system, ABS warning lamp, VDC OFF indicator lamp and SLIP indicator lamp on meter turn on. In this case, perform self-diagnostic as follows:

OPERATION PROCEDURE

1. Turn ignition switch OFF.
2. Connect CONSULT-II and CONSULT-II CONVERTER to data link connector (data link connector is on lower instrument cover).

   CAUTION:
   If CONSULT-II is used with no connection of CONSULT-II CONVERTER, malfunctions might be detected in self-diagnosis depending on control unit which perform CAN communication.
3. Turn ignition switch ON.
4. Start engine and drive vehicle at approximately 30 km/h (19 MPH) or more for approximately 1 minute.
5. After stopping vehicle, with engine still idling, touch “START”, “ABS”, and “SELF-DIAG RESULTS” on CONSULT-II screen in this order.

   CAUTION:
   Just after starting engine, or turning ignition switch ON, “ABS” may not be displayed on system selection screen even if “START” is touched. In this case, start self-diagnostic again from step 1. If it cannot be shown after several attempts, VDC/TCS/ABS control unit may have malfunctioned. Repair or replace control unit.
6. Self-diagnostic results is displayed. (If necessary, touch “PRINT” to print self-diagnostic results.)
   - When “NO FAILURE” is shown, check ABS warning lamp, VDC OFF indicator lamp, SLIP indicator lamp. Refer to BRC-33, "For Fast and Accurate Diagnosis" .
   - CONSULT-II self-diagnostic results are displayed without regard to occurrence timing. In some cases later ones (timing value is small) appear on next screen.
7. Conduct the appropriate inspection from the display item list, and repair or replace the malfunctioning component.
8. Start engine and drive vehicle at approximately 30 km/h (19 MPH) or more for approximately 1 minute.

   CAUTION:
   Check again to make sure that there is no malfunction on other parts.

ERASE MEMORY

1. Turn ignition switch OFF.
2. Start the engine and touch “START (NISSAN BASED VHCL)”, “ABS”, “SELF-DIAG RESULTS”, “ERASE MEMORY” in order on the CONSULT-II screen to erase the error memory.

   CAUTION:
   If the error memory is not erased, re-conduct the operation from step 4.
3. Perform self-diagnosis again, and make sure that diagnostic memory is erased.
4. Drive vehicle at 30 km/h (19 MPH) or more for approximately 1 minute as the final inspection, and make sure that the ABS warning lamp, VDC OFF indicator lamp and SLIP indicator lamp turn off.

DISPLAY ITEM LIST

Code	Display item	Malfunction detecting condition	Check item
C1104	FR LH SENSOR- 1	Circuit of front LH wheel sensor is open.	BRC-36, "Wheel Sensor System"
C1101	RR RH SENSOR- 1	Circuit of rear RH wheel sensor is open.	
C1103	FR RH SENSOR- 1	Circuit of front RH wheel sensor is open.	
C1102	RR LH SENSOR- 1	Circuit of rear LH wheel sensor is open.	
C1108	FR LH SENSOR -2	Circuit of front LH wheel sensor is shorted, or sensor power voltage is unusual. Control unit cannot identify sensor pulses, because of large gap between wheel sensor and sensor rotor.	
C1105	RR RH SENSOR -2	Circuit of rear RH wheel sensor is shorted, or sensor power voltage is unusual. Control unit cannot identify sensor pulses, because of large gap between wheel sensor and sensor rotor.	
C1107	FR RH SENSOR -2	Circuit of front RH wheel sensor is shorted, or sensor power voltage is unusual. Control unit cannot identify sensor pulses, because of large gap between wheel sensor and sensor rotor.	
C1106	RR LH SENSOR -2	Circuit of rear LH wheel sensor is shorted, or sensor power voltage is unusual. Control unit cannot identify sensor pulses, because of large gap between wheel sensor and sensor rotor.	
C1114	MAIN RELAY	During solenoid valve relay operation with OFF, when solenoid valve relay turns ON or when control line for relay is shorted to ground.	BRC-46, "Actuator Relay System"
		During solenoid valve relay operation with ON, when solenoid valve relay turns OFF or when control line for relay is open.	
C1116	STOP LAMP SW	Stop lamp switch circuit is open.	BRC-47, "Stop Lamp Switch System"
C1142	PRESS SEN CIRCUIT	Pressure sensor signal line is open or shorted, or pressure sensor is malfunctioning.	BRC-38, "Pressure Sensor System"
C1143	ST ANG SEN CIRCUIT	Neutral position of steering angle sensor is dislocated, or steering angle sensor is malfunctioning.	BRC-39, "Steering Angle Sensor System"
C1145	YAW RATE SENSOR	Yaw rate sensor has generated an error, or yaw rate sensor signal line is open or shorted.	BRC-41, "Yaw Rate/Side G Sensor System"
C1120	FR LH IN ABS SOL	Circuit of front LH IN ABS solenoid is open or shorted, or control line is open or shorted to power supply or ground.	BRC-43, "Solenoid and VDC Change-Over Valve System"
C1121	FR LH OUT ABS SOL	Circuit of front LH OUT ABS solenoid is open or shorted, or control line is open or shorted to power supply or ground.	
C1126	RR RH IN ABS SOL	Circuit of rear RH IN ABS solenoid is open or shorted, or control line is open or shorted to power supply or ground.	
C1127	RR RH OUT ABS SOL	Circuit of rear RH OUT ABS solenoid is open or shorted, or control line is open or shorted to power supply or ground.	
C1122	FR RH IN ABS SOL	Circuit of front RH IN ABS solenoid is open or shorted, or control line is open or shorted to power supply or ground.	
C1123	FR RH OUT ABS SOL	Circuit of front RH OUT ABS solenoid is open or shorted, or control line is open or shorted to power supply or ground.	
C1124	RR LH IN ABS SOL	Circuit of rear LH IN ABS solenoid is open or shorted, or control line is open or shorted to power supply or ground.	
C1125	RR LH OUT ABS SOL	Circuit of rear LH OUT ABS solenoid is open or shorted, or control line is open or shorted to power supply or ground.	

Code	Display item	Malfunction detecting condition	Check item
C1147	USV LINE [FL-RR]	Circuit of primary-side VDC switch-over valve 1 is open or shorted, or control line is open or shorted to power supply or ground.	BRC-43, "Solenoid and VDC Change-Over Valve System"
C1148	USV LINE [FR-RL]	Circuit of secondary-side VDC switch-over valve 1 is open or shorted, or control line is open or shorted to power supply or ground.	
C1149	HSV LINE [FL-RR]	Circuit of primary-side VDC switch-over valve 2 is open or shorted, or control line is open or shorted to power supply or ground.	
C1150	HSV LINE [FR-RL]	Circuit of secondary-side VDC switch-over valve 2 is open or shorted, or control line is open or shorted to power supply or ground.	
C1111	PUMP MOTOR	During actuator motor operation with ON, when actuator motor turns OFF or when control line for actuator motor relay is open.	BRC-44, "Actuator Motor and Motor Relay System"
		During actuator motor operation with OFF, when actuator motor turns ON or when control line for relay is shorted to ground.	
C1109	BATTERY VOLTAGE [ABNORMAL]	VDC/TCS/ABS control unit power voltage is too low.	BRC-48, "VDC/TCS/ABS Control Unit Power and Ground System"
C1144	ST ANG SEN SIGNAL	Neutral position correction of steering angle sensor is not finished.	BRC-6, "Adjustment of Steering Angle Sensor Neutral Position"
C1143	ST ANG SEN CIRCUIT	CAN communication line or steering angle sensor has generated an error.	BRC-52, "CAN Communication Circuit"
C1146	SIDE G SEN CIRCUIT	Side G sensor is malfunctioning, or signal line of side G sensor is open or shorted.	BRC-41, "Yaw Rate/Side G Sensor System"
C1153	EMERGENCY BRAKE	VDC/TCS/ABS control unit malfunction (pressure increase is too much or too little.)	BRC-50, "VDC/TCS/ABS Control Unit 2"
C1110	CONTROLLER FAILURE	Internal malfunction of VDC/TCS/ABS control unit	BRC-38, "VDC/TCS/ABS Control Unit 1"
C1154	PNP POSI SIG	P position switch stuck to ON or TCM internal malfunction, VDC/TCS/ABS control unit internal malfunction.	BRC-49, "When “SHIFT POSITION ERROR” Appears in Self-Diagnostic results Display (A/T Models)"
U1000	CAN COMM CIRCUIT	● CAN communication line is open or shorted. ● VDC/TCS/ABS control unit internal malfunction ● Battery voltage for ECM is suddenly interrupted for approximately 0.5 seconds or more.	BRC-52, "CAN Communication Circuit"
C1155	BR FLUID LEVEL LOW	Brake fluid level drops or communication line between VDC/TCS/ABS control unit and brake fluid level sensor is open or shorted.	BRC-50, "Brake Fluid Level Switch System"

Code	Display item	Malfunction detecting condition	Check item
C1130	ENGINE SIGNAL 1	Major engine component is malfunctioning.	BRC-38, "Engine System"
C1131	ENGINE SIGNAL 2		
C1132	ENGINE SIGNAL 3		
C1133	ENGINE SIGNAL 4		
C1134	ENGINE SIGNAL 5		
C1136	ENGINE SIGNAL 6		
C1137	RAS CIRCUIT	RAS control unit malfunction	BRC-51, "RAS Control Unit System (With RAS)"

Note 1. If wheel sensor 2 for each wheel is indicated, check control unit power supply voltage in addition to wheel sensor circuit check.
Note 2. If multiple malfunctions are detected including CAN communication line [U1000], perform diagnosis for CAN communication line first.

Data Monitor

NFS000KR

OPERATION PROCEDURE

1. After turning OFF the ignition switch, connect CONSULT-II and the CONVERTER to the data link connector.

   CAUTION:
   If CONSULT-II is used with no connection of CONSULT-II CONVERTER, malfunctions might be detected in self-diagnosis depending on control unit which carry out CAN communication.

2. Touch “START (NISSAN BASED VHCL)”, “ABS”, “DATA MONITOR” in order on the CONSULT-II screen. If “ABS” is not indicated, go to GI-39, "CONSULT-II Data Link Connector (DLC) Circuit" .

   CAUTION:
   When “START (NISSAN BASED VHCL)” is touched immediately after starting the engine or turning on the ignition switch, “ABS” might not be displayed in the “SELECT SYSTEM” screen. In this case, repeat the operation from step 2.

3. Return to the “SELECT MONITOR ITEM” screen, and touch “ECU INPUT SIGNALS”, “MAIN SIGNALS” or “SELECTION FROM MENU”. Refer to the following information.
4. When “START” is touched, the data monitor screen is displayed.

DISPLAY ITEM LIST

Display item	SELECT MONITOR ITEM			Remarks
	ECU INPUT SIGNALS	MAIN SIGNALS	SELECTION FROM MENU	
GEAR (A/T model)	×	×	×	Gear position judged by TCM is displayed.
FR RH SENSOR (km/h)	×	×	×	Wheel speed calculated by front RH wheel sensor signal is displayed.
FR LH SENSOR (km/h)	×	×	×	Wheel speed calculated by front LH wheel sensor signal is displayed.
RR RH SENSOR (km/h)	×	×	×	Wheel speed calculated by rear RH wheel sensor signal is displayed.
RR LH SENSOR (km/h)	×	×	×	Wheel speed calculated by rear LH wheel sensor signal is displayed.
BATTERY VOLT (V)	×	×	×	Voltage supplied to VDC/TCS/ABS control unit is displayed.
SLCT LVR POSI (A/T model)	×	×	×	Shift position judged by PNP switch signal.
ACCEL POS SIG (%)	×	–	×	Throttle actuator opening/closing condition judged by CAN communication signal is displayed.
ENGINE RPM (rpm)	×	–	×	Engine speed judged by CAN communication signal is displayed.

Display item	SELECT MONITOR ITEM			Remarks
	ECU INPUT SIGNALS	MAIN SIGNALS	SELECTION FROM MENU	
CAN COM START (ON/OFF)	–	–	×	Communication condition of CAN communication is displayed.
STR ANGLE SIG (°)	×	–	×	Steering angle detected by steering angle sensor is displayed.
YAW RATE SEN (d/s)	×	×	×	Yaw rate detected by yaw rate sensor is displayed.
SIDE G- SENSOR (m/s^2)	×	–	×	Transverse acceleration detected by side G sensor is displayed.
PRESS SENSOR (bar)	×	–	×	Brake fluid pressure detected by pressure sensor is displayed.
STOP LAMP SW (ON/OFF)	×	×	×	Stop lamp switch (ON/OFF) condition is displayed.
PARK BRAKE SW (ON/OFF)	×	–	×	Parking brake switch (ON/OFF) condition is displayed.
OFF SW (ON/OFF)	×	×	×	VDC OFF switch (ON/OFF) condition is displayed.
ABS WARN LAMP (ON/OFF)	–	×	×	ABS warning lamp (ON/OFF) condition is displayed.
SLIP LAMP (ON/OFF)	–	×	×	SLIP indicator lamp (ON/OFF) condition is displayed.
FR LH IN SOL (ON/OFF)	–	×	×	Front LH IN ABS solenoid (ON/OFF) condition is displayed.
FR LH OUT SOL (ON/OFF)	–	×	×	Front LH OUT ABS solenoid (ON/OFF) condition is displayed.
RR RH IN SOL (ON/OFF)	–	×	×	Rear RH IN ABS solenoid (ON/OFF) condition is displayed.
RR RH OUT SOL (ON/OFF)	–	×	×	Rear RH OUT ABS solenoid (ON/OFF) condition is displayed.
FR RH IN SOL (ON/OFF)	–	×	×	Front RH IN ABS solenoid (ON/OFF) condition is displayed.
FR RH OUT SOL (ON/OFF)	–	×	×	Front RH OUT ABS solenoid (ON/OFF) condition is displayed.
RR LH IN SOL (ON/OFF)	–	×	×	Rear LH IN ABS solenoid (ON/OFF) condition is displayed.
RR LH OUT SOL (ON/OFF)	–	×	×	Rear LH OUT ABS solenoid (ON/OFF) condition is displayed.
OFF LAMP (ON/OFF)	–	×	×	VDC OFF indicator Lamp (ON/OFF) condition is displayed.
MOTOR RELAY (ON/OFF)	–	×	×	ABS motor relay (ON/OFF) condition is displayed.
ACTUATOR RLY	–	×	×	Solenoid valve relay (ON/OFF) condition is displayed.
USV [FL-RR] (ON/OFF)	–	–	×	Primary-side USV solenoid valve (ON/OFF) condition is displayed.
USV [FR-RL] (ON/OFF)	–	–	×	Secondary-side USV solenoid valve (ON/OFF) condition is displayed.
HSV [FL-RR] (ON/OFF)	–	–	×	Primary-side HSV solenoid valve (ON/OFF) condition is displayed.
HSV [FR-RL] (ON/OFF)	–	–	×	Secondary-side HSV solenoid valve (ON/OFF) condition is displayed.

Display item	SELECT MONITOR ITEM			Remarks
	ECU INPUT SIGNALS	MAIN SIGNALS	SELECTION FROM MENU	
V/R OUTPUT (ON/OFF)	–	–	×	Valve relay operation signal (ON/OFF) condition is displayed.
M/R OUTPUT (ON/OFF)	–	–	×	Front motor relay activation signal (ON/OFF) condition is displayed.
VDC FAIL SIG (ON/OFF)	–	–	×	VDC fail signal (ON/OFF) condition is displayed.
TCS FAIL SIG (ON/OFF)	–	–	×	TCS fail signal (ON/OFF) condition is displayed.
ABS FAIL SIG (ON/OFF)	–	–	×	ABS fail signal (ON/OFF) condition is displayed.
EBD FAIL SIG (ON/OFF)	–	–	×	EBD fail signal (ON/OFF) condition is displayed.
FLUID LEV SW (ON/OFF)	×	–	×	Brake fluid level switch (ON/OFF) condition is displayed.
CRANKING SIG	–	–	×	Ignition switch (START) switch signal input condition is displayed.
EBD SIGNAL (ON/OFF)	–	–	×	EBD operation (ON/OFF) condition is displayed.
ABS SIGNAL (ON/OFF)	–	–	×	ABS operation (ON/OFF) condition is displayed.
TCS SIGNAL (ON/OFF)	–	–	×	TCS operation (ON/OFF) condition is displayed.
VDC SIGNAL (ON/OFF)	–	–	×	VDC operation (ON/OFF) condition is displayed.

×: Applicable
–: Not applicable

Active Test

NFS000L9

CAUTION:

- **Do not perform active test while driving vehicle.**
- **Make sure to completely bleed air from brake system.**
- **The active test cannot be performed with the ABS warning lamp, VDC indicator lamp and SLIP indicator lamp are on.**

OPERATION PROCEDURE

1. Connect CONSULT-II and CONSULT-II CONVERTER to the data link connector and start engine.

   CAUTION:
   If CONSULT-II is used with no connection of CONSULT-II CONVERTER, malfunctions might be detected in self-diagnosis depending on control unit which perform CAN communication.
2. Touch “START (NISSAN BASED VHCL)” on the display screen.
3. Touch “ABS”. If “ABS” is not indicated, go to GI-39, "CONSULT-II Data Link Connector (DLC) Circuit" .
4. Touch “ACTIVE TEST”.
5. The test item selection screen is displayed.

6. Touch necessary test item.

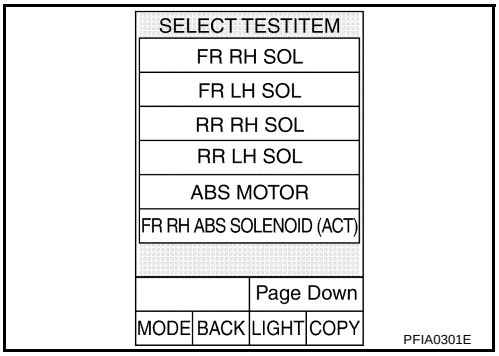

7. With the “MAIN ITEM” display shown in reverse, touch “START”.
8. The “ACTIVE TEST” screen will be displayed, so conduct the following test.

NOTE:

- When the active test is conducted while depressing the pedal, the pedal depression amount will change, but this is normal.
- Approximately 10 seconds after the operation is begun, “TEST STOP” will be displayed.
- To conduct a retest after “TEST STOP” is displayed, touch “BACK” and conduct the test from the step 6.

TEST ITEM

Solenoid Valve

CAUTION:

The example shown is for the from right wheel. The procedure for the other wheels is the same as given below.

- To perform active test of ABS functions, select major items for each test item. To perform active test of VDC/TCS functions, select item menu for each test item.
- For ABS solenoid valve, touch “UP”, “KEEP”, and “DOWN”. For ABS solenoid valve (ACT), touch “UP,” “ACT UP,” and “ACT KEEP”. Use screen monitor to make sure solenoid valve operates as shown in Solenoid Valve Operation Chart.

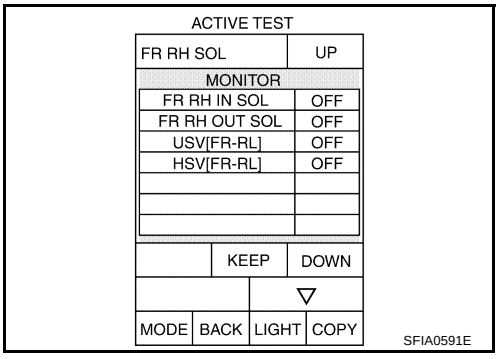

Operation	ABS solenoid valve			ABS solenoid valve (ACT)		
	UP	KEEP	DOWN	UP	ACT UP	ACT KEEP
FR RH IN SOL	OFF	ON	ON	OFF	OFF	OFF
FR RH OUT SOL	OFF	OFF	ON*	OFF	OFF	OFF
USV [FR-RL]	OFF	OFF	OFF	OFF	ON	ON
HSV [FR-RL]	OFF	OFF	OFF	OFF	ON*	OFF

*: ON for 1 to 2 seconds after the touch, and then OFF

ABS Motor

Touch “ON” and “OFF” on screen. Make sure motor relay operates as shown in table below.

Operation	ON	OFF
MOTOR RELAY	ON	OFF
ACTUATOR RLY	ON	ON

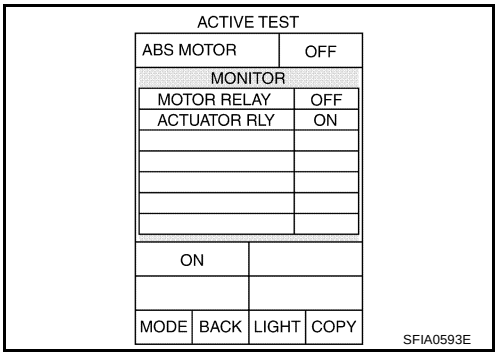

For Fast and Accurate Diagnosis

NFS0006Z

PRECAUTIONS FOR DIAGNOSIS

- Before performing diagnosis, always read General Information (GI) to confirm general precautions. Refer to GI-3, "PRECAUTIONS" .
- If VDC/TCS/ABS control unit, steering angle sensor, steering system parts, suspension system parts, or tires have been replaced, or if wheel alignment has been adjusted, be sure to adjust neutral position of steering angle sensor before driving. Refer to BRC-6, "Adjustment of Steering Angle Sensor Neutral Position" .
- When replacing VDC/TCS/ABS control unit, be sure label on control unit are the same color.
- After diagnosis is finished, be sure to erase memory. Refer to BRC-26, "ERASE MEMORY" .
- When checking continuity and voltage between unit, be sure to check for disconnection, looseness, bend, or collapse of connector terminals. If any malfunction is found, repair or replace connector terminals.
- For intermittent symptoms, possible cause is malfunction in harness, harness connector, or terminals. Move harness, harness connector, and terminals to check for poor connections.
- If a circuit tester is used for the check, be careful not to forcibly extend any connector terminal.
- To use CONSULT-II to perform self-diagnosis of VDC/TCS/ABS control unit, active tests, or work support, first stop work, then connect CONSULT-II and select “ABS”.
- CONSULT-II self-diagnostic results are displayed without regard to occurrence timing. In some cases later ones (timing value is small) appear on former screen.
- While self-diagnostic results of CONSULT-II shows malfunction, if CONSULT-II active test is performed, an engine system error may be indicated. In this case, start engine to resume normal screen.
- VDC/TCS/ABS system electronically controls brake operation and engine output. The following symptoms may be caused by normal operations:

Symptom	Symptom description	Result
Motor operation sound	This is sound of motor inside VDC/TCS/ABS actuator. Slight sound may occur during VDC, TCS, and ABS operation.	Normal
	Just after engine starts, the motor operating sound may be heard. This is a normal condition of the system operation check.	
System operation check sound	When engine starts, slight “click” sound may be heard from engine room. This is normal and is part of system operation check.	Normal
TCS operation (SLIP indicator lamp ON)	TCS may activate momentarily if wheel speed changes when driving over location where friction coefficient varies, when downshifting, or when fully depressing accelerator pedal.	Normal Cancel the VDC/TCS function for the inspection on a chassis dynamometer.
	When checking speed meter etc. with a 2-wheel-drive chassis dynamometer, vehicle speed is not increased by pressing down on the accelerator.	

Symptom	Symptom description	Result
ABS operation (Longer stopping distance)	On roads with low friction coefficients, such as snowy roads or gravel roads, vehicles with ABS may require a longer stopping distance. Therefore, when driving on such roads, avoid overconfidence and keep speed sufficiently low.	Normal
Insufficient feeling of acceleration	Depending on road conditions, driver may feel that feeling of acceleration is insufficient. This is because traction control, which controls engine and brakes to achieve optimal traction, has the highest priority (for safety). As a result, there may be times when acceleration is slightly less than usual for the same accelerator pedal operation.	Normal

ON and OFF Timing for ABS Warning Lamp, VDC OFF Indicator Lamp, SLIP Indicator Lamp and Brake Warning Lamp

×: ON –: OFF

Condition	ABS warning lamp	VDC OFF indicator lamp	SLIP indicator lamp	Brake warning lamp [Note1]
Ignition SW OFF	–	–	–	–
For 1 second after turning ON ignition switch	×	×	×	×[Note 2]
1 second later after turning ON ignition switch	–	–	–	×[Note 2]
VDC OFF switch turned ON. (VDC function is OFF.)	–	×	–	–
VDC/TCS/ABS error.	×	×	×	–
When VDC/TCS is not functioning normally.	–	×	×	–
EBD error.	×	×	×	–

Note1:Brake warning lamp will turn on in case of parking brake operation (when switch is ON) or of brake fluid level switch operation (when brake fluid is insufficient).
Note2:After starting engine, brake warning lamp is turned off.

Basic Inspection

NFS00070

BRAKE FLUID LEVEL AND LEAK INSPECTION

1. Check fluid level in brake reservoir tank. If fluid level is low, refill brake fluid.
2. Check for leakage in brake piping and around VDC actuator. If leakage or is found, check as follows.
   - If the connections at VDC actuator connector are loose, tighten piping to specified torque. Then inspect again and confirm that there is no leakage.
   - If flare nuts or screws of VDC actuator are damaged and loose, replace damaged parts. Then inspect again and confirm that there is no leakage.
   - If there is leakage at any location other than VDC actuator connections, wipe away leakage with clean cloth. Then inspect again and confirm that there is no leakage.
   - If there is leakage from VDC actuator, wipe away leakage with clean cloth. Then inspect again. If there is leakage, replace VDC actuator.

     CAUTION:
     VDC actuator body cannot be disassembled.
3. Check brake disc rotor and pads. Refer to BR-21, "PAD WEAR INSPECTION" , BR-27, "PAD WEAR INSPECTION" .

INSPECTION FOR LOOSENESS OF POWER SYSTEM TERMINALS

Check battery for looseness on battery positive/negative terminals and ground connection. If looseness is detected, fasten the connections to the specified torque. Make sure battery voltage does not drop and alternator is normal.

INSPECTION OF ABS WARNING LAMP, VDC OFF INDICATOR LAMP AND SLIP INDICATOR LAMP

1. Make sure that ABS warning lamp illuminates when ignition switch is turned ON. If it does not illuminate, inspect ABS warning lamp and circuit, and inspect combination meter. Refer to DI-4, "COMBINATION METERS" .
2. Make sure that VDC OFF indicator lamp illuminates when ignition switch is turned ON. If it does not illuminate, inspect VDC OFF indicator lamp and circuit, and inspect combination meter. Refer to DI-4, "COMBINATION METERS" . If VDC OFF indicator lamp does not illuminate, inspect VDC OFF switch and circuit first time. Refer to BRC-52, "VDC OFF SWITCH" .
3. Make sure that SLIP indicator lamp illuminates when ignition switch is turned ON. If it does not turn on, check SLIP indicator lamp and circuit, and inspect combination meter. Refer to DI-4, "COMBINATION METERS" .
4. With engine running, turn VDC OFF switch ON and OFF. Check that VDC OFF indicator lamp turns ON and OFF. If indicator lamp does not turn ON and OFF in accordance with switch over of VDC OFF switch, inspect VDC OFF switch and circuit. Refer to BRC-52, "VDC OFF SWITCH" .
5. With VDC OFF switch OFF (not operating), make sure that VDC OFF indicator lamp turns off after engine starts. If VDC OFF indicator lamp does not turn OFF after 10 seconds have passed since engine-start, perform self-diagnosis of VDC/TCS/ABS control unit. Refer to BRC-26, "Self-Diagnosis" . Be sure to erase memory after performing self-diagnosis. Refer to BRC-26, "ERASE MEMORY" .

TROUBLE DIAGNOSIS FOR SYSTEM

PFP:00000

Wheel Sensor System

NFS00071

First use CONSULT-II self-diagnostic results to determine positions of malfunctioning wheel sensors. Then inspect parts and determine which parts to replace.

CAUTION:

- **Do not measure the resistance value and also voltage between sensor terminal with tester etc., because sensor is an active sensor.**
- **Do not expand terminal of connector with a tester terminal stick, when it does the inspection with tester.**

INSPECTION PROCEDURE

1. CHECK SELF-DIAGNOSTIC RESULTS

Check the self-diagnostic results.

Self-diagnostic results
FR RH SENSOR -1, -2
FR LH SENSOR -1, -2
RR RH SENSOR -1, -2
RR LH SENSOR -1, -2

Is above displayed in the self-diagnosis display item?

YES >> GO TO 2.
NO >> INSPECTION END.

2. CHECK TIRE

Check air pressure, wear and size.

Are air pressure, wear, and size within standards?

YES >> GO TO 3.
NO >> Adjust air pressure or replace tire.

3. CHECK CONNECTOR

Turn ignition switch OFF and disconnect VDC/TCS/ABS control unit connector and connector of wheel sensor where malfunction was detected. Check terminals for deformation and connectors for poor contact. Then reconnect connectors. Also make sure interference with other parts has not cut wheel sensor cables.

Drive vehicle at 30 km/h (19 MPH) or above for at least 1minute. Does ABS warning lamp turn off?

YES >> INSPECTION END
NO >> GO TO 4.

4. CHECK SENSOR ROTOR

Check sensor rotor teeth and surface of rubber for damage.

OK or NG

OK >> GO TO 5.
NG >> Replace sensor rotor.

5. CHECK WHEEL SENSOR HARNESS

1. Turn ignition switch OFF and disconnect malfunctioning wheel sensor connector and VDC/TCS/ABS control unit connector.
2. Check the continuity between terminals. (Also check the continuity when steering wheel is turned right and left and when sensor harness inside wheel well is moved.)

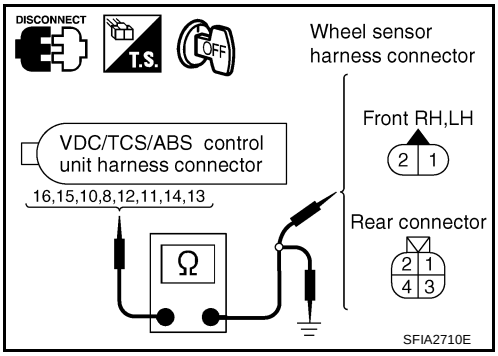

	Power supply circuit		Signal circuit		Ground circuit	
Wheel	VDC/TCS/ABS control unit	Wheel sensor	VDC/TCS/ABS control unit	Wheel sensor	VDC/TCS/ABS control unit (Signal)	VDC/TCS/ABS control unit (Ground)
Front RH	16	1	15	2	15, 16	—
Front LH	10	1	8	2	8, 10	
Rear RH	12	1	11	2	11, 12	
Rear LH	14	3	13	4	13, 14	

Power supply circuit : Continuity should exist.
Signal circuit : Continuity should exist.
Ground circuit : Continuity should not exist.

OK or NG

OK >> GO TO 6.
NG >> Repair or replace harness and connector that have malfunction.

6. CHECK WHEEL SENSOR

1. Replace wheel sensor that resulted in malfunction by self-diagnosis.
2. Reconnect connectors, drive vehicle at 30 km/h (19 MPH) or more for approximately 1 minute, and then perform self-diagnosis.

Is above displayed on self-diagnosis display?

OK >> Wheel sensor has malfunction.
NG >>
- Replace VDC/TCS/ABS control unit.
- Perform to self-diagnosis again, and make sure that the result shows “NO DTC IS DETECTED. FURTHER TESTING MAY BE REQUIRED.”

Engine System

NFS00072

INSPECTION PROCEDURE

1. CHECK SELF-DIAGNOSTIC RESULTS

Check the self-diagnostic results.

Self-diagnostic results
ENGINE SIGNAL 1
ENGINE SIGNAL 2
ENGINE SIGNAL 3
ENGINE SIGNAL 4
ENGINE SIGNAL 5
ENGINE SIGNAL 6

Is above displayed on self-diagnosis display?

YES >> GO TO 2.
NO >> INSPECTION END

2. CHECK ENGINE SYSTEM

1. Perform ECM self-diagnosis. Repair or replace items indicated, then perform ECM self-diagnosis again.
2. Perform VDC/TCS/ABS control unit self-diagnosis again.

OK or NG

OK >> INSPECTION END
NG >> Repair or replace the items indicated. Then perform self-diagnosis again.

VDC/TCS/ABS Control Unit 1

NFS00073

INSPECTION PROCEDURE

1. CHECK SELF-DIAGNOSTIC RESULTS

Check the self-diagnostic results.

Self-diagnostic results
CONTROLLER FAILURE

Is above displayed on self-diagnosis display?

YES >> Repair or replace the items indicated. Then perform self-diagnosis again.
NO >> Replace VDC/TCS/ABS control unit. Then perform VDC/TCS/ABS control unit self-diagnosis again.

Pressure Sensor System

NFS00074

INSPECTION PROCEDURE

1. CHECK SELF-DIAGNOSTIC RESULTS

Check the self-diagnostic results.

Self-diagnostic results
PRESS SEN CIRCUIT

Is above displayed on self-diagnosis display?

YES >> GO TO 2.
NO >> INSPECTION END

2. CHECK CONNECTOR

1. Turn ignition switch OFF and disconnect VDC actuator (pressure sensor) connector and VDC/TCS/ABS control unit connector. Then reconnect them securely.
2. Perform VDC/TCS/ABS control unit self-diagnosis again.

OK or NG

OK >> Poor connection of connectors. Repair or replace suspect connector. Perform self-diagnosis again.
NO >> GO TO 3.

3. CHECK PRESSURE SENSOR CIRCUIT

1. Turn ignition switch OFF and disconnect VDC actuator (pressure sensor) connector and VDC/TCS/ABS control unit connector.
2. Check continuity between VDC/TCS/ABS control unit harness connector M93 and VDC actuator (pressure sensor) harness connector E50.

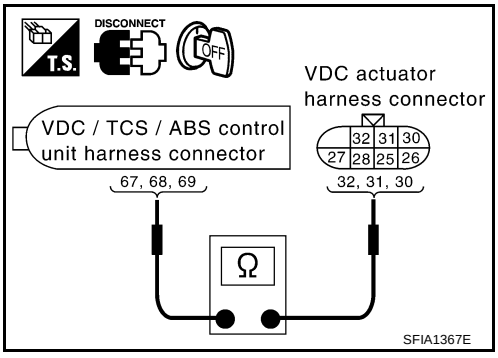

VDC/TCS/ABS control unit	Pressure sensor	Continuity
69	30	Yes
68	31	
67	32	

OK or NG

OK >> GO TO 4.
NG >> Open or short in harness. Repair or replace the suspect harness.

4. CHECK PRESSURE SENSOR

1. Connect VDC actuator (pressure sensor) connector and VDC/TCS/ABS control unit connector.
2. Check pressure sensor value on “DATA MONITOR”.

Condition	Data monitor display
Brake pedal depressed	Positive value
When brake pedal is released.	Approx. 0 bar

OK or NG

OK >> Perform VDC/TCS/ABS control unit self-diagnosis again.
NG >> Pressure sensor malfunction. Replace VDC actuator (inside pressure sensor).

Steering Angle Sensor System

NFS00075

INSPECTION PROCEDURE

1. CHECK SELF-DIAGNOSTIC RESULTS

Check the self-diagnostic results.

Self-diagnostic results
ST ANGLE SEN CIRCUIT

Is above displayed on self-diagnosis display?

YES >> GO TO 2.
NO >> INSPECTION END

2. CHECK CONNECTOR

1. Turn ignition switch OFF and disconnect steering angle sensor connector and VDC/TCS/ABS control unit connector. Then reconnect them securely.
2. Perform VDC/TCS/ABS control unit self-diagnosis again.

OK or NG

OK >> Poor connection of connectors. Repair or replace suspect connector. Perform self-diagnosis again.
NO >> GO TO 3.

3. CHECK STEERING ANGLE SENSOR CIRCUIT

1. Turn ignition switch OFF and disconnect VDC/TCS/ABS control unit connector and steering angle sensor connector.
2. Check continuity between VDC/TCS/ABS control unit harness connector M93 and steering angle sensor harness connector M22.

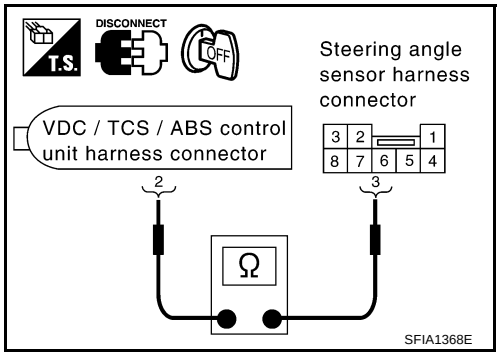

VDC/TCS/ABS control unit	Steering angle sensor	Continuity
2	3	Yes

OK or NG

OK >> GO TO 4.
NG >> Open or short in harness. Repair or replace the suspect harness.

4. PERFORM DATA MONITOR

1. Connect VDC/TCS/ABS control unit connector and steering angle sensor connector.
2. Perform “DATA MONITOR” for “STR ANGLE SIG”. Check if results are normal.

Steering condition	DATA MONITOR
Driving straight	-5 to +5°
Turned 90°to right	Approx. +90°
Turned 90°to left	Approx. -90°

OK or NG

OK >> Perform VDC/TCS/ABS control unit self-diagnosis again.
NG >> Replace steering angle sensor and adjust neutral position of steering angle sensor. Refer to BRC-6, "Adjustment of Steering Angle Sensor Neutral Position" .

Yaw Rate/Side G Sensor System

NFS00076

CAUTION:
Sudden turns (such as spin turns, acceleration turns), drifting, etc.; when VDC function is OFF (VDC OFF indicator lamp is turned on) may cause yaw rate/side G sensor circuit to indicate a malfunction. However, this is not a malfunction, if normal operation can be resumed after restarting engine. Then erase memory of self-diagnosis.

INSPECTION PROCEDURE

1. CHECK SELF-DIAGNOSTIC RESULTS

Check the self-diagnostic results.

Self-diagnostic results
YAW RATE SENSOR SIDE G-SEN CIRCUIT

CAUTION:
If vehicle is on turn-table at entrance to parking garage, or on other moving surface, VDC OFF indicator lamp may illuminate and CONSULT-II self-diagnosis may indicate yaw rate sensor system malfunction. However, in this case there is no malfunction in yaw rate sensor system. Take vehicle off of turn-table or other moving surface, and start engine. Results will return to normal. And after doing spin turns or acceleration turns with VDC "OFF" (VDC OFF switch "ON"), too, the results will return to a normal state by re-starting vehicle.

Do "YAW RATE SENSOR " and "SIDE G-SEN CIRCUIT" appear on self-diagnosis display?

YES >> GO TO 2.
NO >> INSPECTION END

2. CHECK CONNECTOR

1. Turn ignition switch OFF and disconnect yaw rate/side G sensor connector and VDC/TCS/ABS control unit connector. Then reconnect them securely.
2. Perform VDC/TCS/ABS control unit self-diagnosis again.

OK or NG

OK >> Poor connection of connectors. Repair or replace suspect connector. Perform self-diagnosis again.
NO >> GO TO 3.

3. CHECK YAW RATE/SIDE G SENSOR CIRCUIT

1. Turn ignition switch OFF and disconnect yaw rate/side G sensor connector and VDC/TCS/ABS control unit connector.
2. Check continuity between VDC/TCS/ABS control unit harness connector M93 and yaw rate/side G sensor harness connector M51.

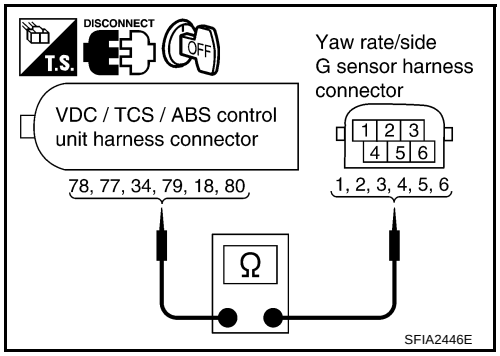

VDC/TCS/ABS control unit	Yaw rate/ Side G sensor	Continuity
78	1	Yes
77	2	
34	3	
79	4	
18	5	
80	6	

OK or NG

OK >> GO TO 4.
NG >> Open or short in harness. Repair or replace the suspect harness.

4. CHECK DATA MONITOR

1. Connect VDC/TCS/ABS control unit connector and yaw rate/side G sensor connector.
2. Check “DATA MONITOR” for yaw rate /side G sensor. Make sure results are normal.

Vehicle condition	Yaw rate sensor (Data monitor standard)	Side G sensor (Data monitor standard)
Stopped	-4 to +4 deg/s	-1.1 to +1.1 m/s^2
Turning right	Negative value	Negative value
Turning left	Positive value	Positive value

OK or NG

OK >> Perform VDC/TCS/ABS control unit self-diagnosis again.
NG >> Malfunction of yaw rate/side G sensor. Replace yaw rate/side G sensor and perform VDC/TCS/ABS control unit self-diagnosis again.

Solenoid and VDC Change-Over Valve System

NFS00077

INSPECTION PROCEDURE

1. CHECK SELF-DIAGNOSTIC RESULTS (1)

Check the self-diagnostic results.

Self-diagnostic results
IN ABS SOL
OUT ABS SOL
USV LINE [FL-RR]
USV LINE [FR-RL]
HSV LINE [FL-RR]
HSV LINE [FR-RL]

Is above displayed on self-diagnosis display?

YES >> GO TO 2.
NO >> INSPECTION END

2. CHECK CONNECTOR

1. Turn ignition switch OFF and disconnect VDC/TCS/ABS control unit connector and VDC actuator connectors. Then reconnect them securely.
2. Reconnect connectors securely and perform self-diagnosis again.

Do any self-diagnosis items appear?

YES >> GO TO 3.
NO >> Poor connection. Repair or replace connector.

3. CHECK ACTUATOR SOLENOID

1. Turn ignition switch OFF and disconnect VDC relay box connector E222 and VDC actuator connectors.
2. Check resistance of VDC actuator solenoid.

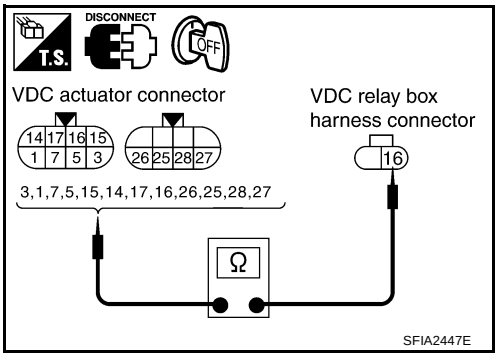

VDC actuator connector	VDC relay box	Resistance value
7, 3, 5, 1, 25, 26	16	6.0 - 11 Ω
17, 15, 16, 14, 27, 28		3.0 - 5.0 Ω

OK or NG

OK >> GO TO 4.
NG >> Check harness open or short between VDC relay box and VDC actuator. If harness is OK, replace VDC actuator.

4. CHECK SOLENOID CIRCUIT

1. Disconnect VDC/TCS/ABS control unit and VDC actuator connectors.
2. Check continuity between VDC/TCS/ABS control unit harness connector M93 and VDC actuator harness connector E49 and E50.

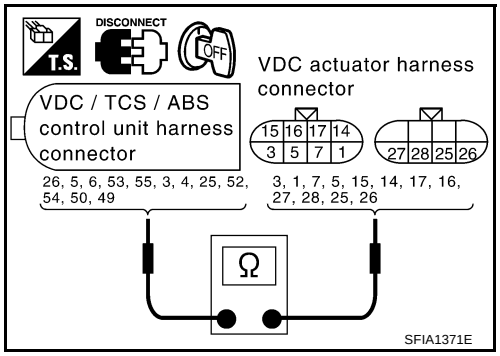

VDC/TCS/ABS control unit	VDC actuator	Continuity
5	1	Yes
3	14	
6	7	
4	17	
26	3	
55	15	
53	5	
25	16	
49	26	
50	25	
54	28	
52	27	

OK or NG

OK >> Replace VDC actuator.
NG >> If the open or short in harness, repair or replace harness.

Actuator Motor and Motor Relay System

NFS00078

INSPECTION PROCEDURE

1. CHECK SELF-DIAGNOSTIC RESULTS

Check self-diagnostic results.

Self-diagnostic results
PUMP MOTOR

Is the above displayed in the self-diagnosis display items?

YES >> GO TO 2.
NO >> INSPECTION END

2. CHECK CONNECTOR

1. Turn ignition switch OFF and disconnect VDC/TCS/ABS control unit connector and VDC relay box connectors.
2. Reconnect connectors securely and perform self-diagnosis again.

Do any self-diagnosis items appear?

YES >> GO TO 3.
NO >> Poor connection. Repair or replace connector.

3. CHECK ABS MOTOR AND MOTOR RELAY POWER SYSTEM

1. Turn ignition switch OFF and disconnect VDC relay box connector.
2. Check voltage between VDC relay box harness connector E48 and ground.

VDC relay box	Ground	Voltage
10	—	Battery voltage (Approx. 12 V)

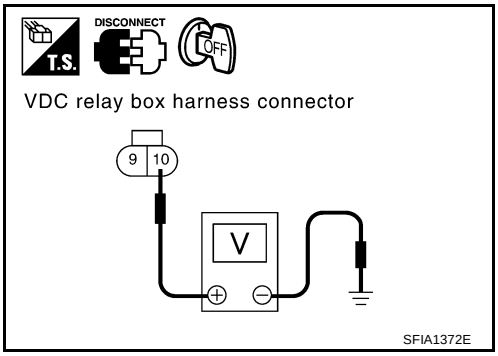

OK or NG

OK >> GO TO 4.
NG >> ● Check fuse 50A.
● Make sure there is continuity between battery positive terminal and VDC relay box harness connector E48 terminal No. 10.

4. CHECK ABS MOTOR AND MOTOR RELAY CIRCUIT

1. Turn ignition switch OFF and disconnect VDC/TCS/ABS control unit connector and VDC relay box connector.
2. Check for continuity between VDC/TCS/ABS control unit harness connector M93 and VDC relay box harness connector E47.

VDC/TCS/ABS control unit	VDC relay box	Continuity
20	4	Yes
7	8	

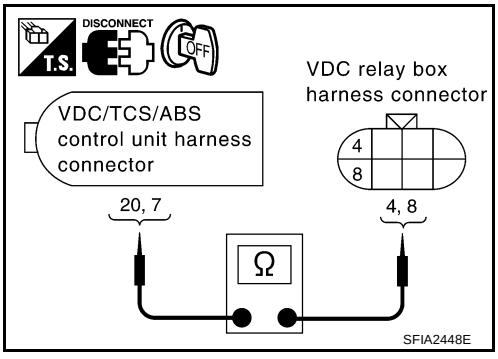

OK or NG

OK >> GO TO 5.
NG >> Open or short in harness between VDC/TCS/ABS control unit and VDC relay box

5. CHECK ACTUATOR MOTOR

Check if actuator motor operates after energizing approximately 12 V to the connector terminal 15 at the VDC relay box harness connector E222.

CAUTION:
To prevent overheating, do not drive actuator motor more than 4 seconds.

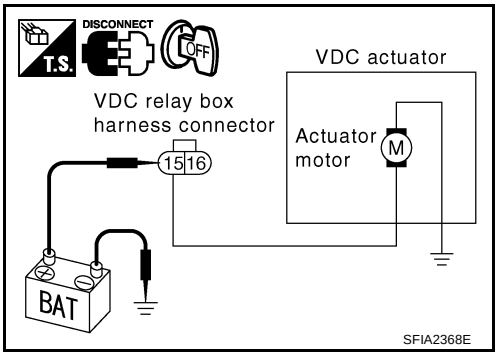

OK or NG

OK >> GO TO 6.
NG >> Actuator motor or actuator motor circuit open or short in harness. Replace VDC actuator.

6. CHECK MOTOR RELAY UNIT

Check motor relay as a unit. Refer to BRC-52, "ABS MOTOR RELAY AND ACTUATOR RELAY" .

OK or NG

OK >> Replace VDC actuator.
NG >> Replace VDC relay box (motor relay).

Actuator Relay System

NFS00079

INSPECTION PROCEDURE

1. CHECK SELF-DIAGNOSTIC RESULTS

Check the self-diagnostic results.

Self-diagnostic results
MAIN RELAY

Is above displayed in the self-diagnosis item?

YES >> GO TO 2.
NO >> INSPECTION END

2. CHECK CONNECTOR

1. Turn ignition switch OFF and disconnect VDC/TCS/ABS control unit connector and VDC relay box connectors. Then reconnect it securely.
2. Perform VDC/TCS/ABS control unit self-diagnosis again.

Do any self-diagnosis items appear?

YES >> GO TO 3.
NO >> Poor connection. Repair or replace connector.

3. CHECK VDC/TCS/ABS CONTROL UNIT GROUND CIRCUIT

1. Turn ignition switch OFF and disconnect VDC/TCS/ABS control unit connector M93.
2. Check VDC/TCS/ABS control unit ground circuit.

VDC/TCS/ABS control unit	Ground	Continuity
28, 29	—	Yes

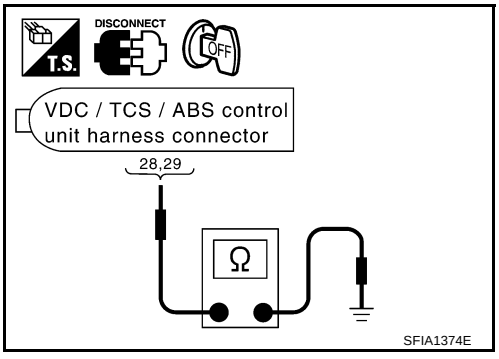

OK or NG

OK >> GO TO 4.
NG >> ● Poor connection of VDC/TCS/ABS control unit, or harness malfunction.

4. CHECK ACTUATOR RELAY POWER SUPPLY CIRCUIT

1. Disconnect VDC relay box connector.
2. Check voltage between VDC relay box harness connector E48 and ground.

VDC relay box	Ground	Voltage
9	—	Battery voltage (Approx. 12 V)

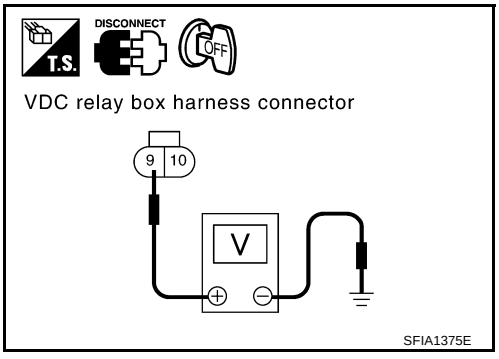

OK or NG

OK >> GO TO 5.
NG >> ● Check fuse 30 A.
● Check continuity between battery positive terminal and VDC relay box harness connector E48 terminal No. 9. If it is not OK, replace fuse or harness.

5. CHECK ACTUATOR RELAY POWER SUPPLY CIRCUIT

1. Disconnect VDC/TCS/ABS control unit connector and VDC relay box connector and steering angle sensor connector.
2. Check continuity between VDC/TCS/ABS control unit harness connector M93 and VDC relay box harness connector E47.

VDC/TCS/ABS control unit	VDC relay box	Continuity
2	5	Yes
36	7	

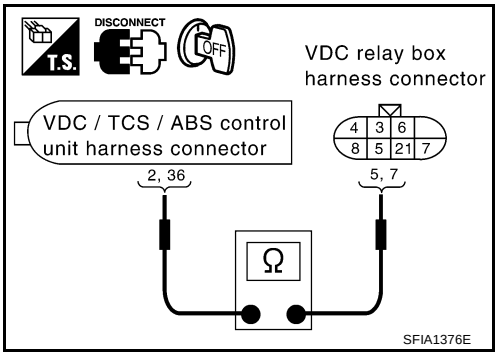

OK or NG

OK >> GO TO 6.
NG >> Open or short in harness. Repair or replace harness.

6. CHECK SOLENOID VALVE RELAY UNIT

Check solenoid valve relay as a unit. Refer to BRC-52, "ABS MOTOR RELAY AND ACTUATOR RELAY" .

OK or NG

OK >> Replace VDC actuator.
NG >> Replace solenoid valve relay.

Stop Lamp Switch System

NFS0007A

INSPECTION PROCEDURE

1. CHECK SELF-DIAGNOSTIC RESULTS

Check the self-diagnostic results.

Self-diagnostic results
STOP LAMP SW

Is above displayed in the self-diagnosis item?

YES >> GO TO 2.
NO >> INSPECTION END

2. CHECK STOP LAMP

1. Turn ignition switch OFF and disconnect stop lamp switch connector and VDC/TCS/ABS control unit connector.
2. Reconnect connectors securely.
3. Start engine.
4. Repeat pumping brake pedal carefully several times, then perform self-diagnosis.

Do any self-diagnostic items appear?

YES >> GO TO 3.
NO >> Poor connection. Repair or replace connector.

3. CHECK STOP LAMP SWITCH CIRCUIT

1. Turn ignition switch OFF and disconnect VDC/TCS/ABS control unit harness connector.
2. Check continuity between VDC/TCS/ABS control unit harness connector M93 terminal 48 and ground.

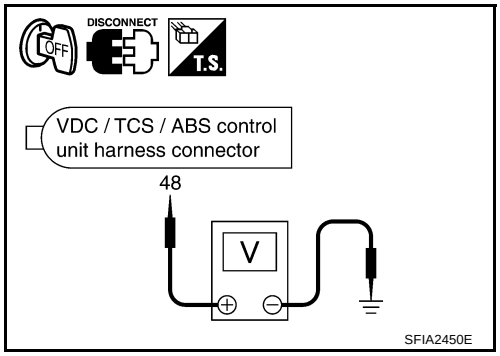

VDC/TCS/ABS control unit	Ground	Measurement condition	Voltage
48	—	Brake pedal depressed	Battery voltage (Approx. 12 V)
		Brake pedal not depressed	Approx. 0 V

OK or NG

OK >> Perform VDC/TCS/ABS control unit self-diagnosis again.
NG >> Open or short in harness between VDC/TCS/ABS control unit and stop lamp switch

VDC/TCS/ABS Control Unit Power and Ground System

NFS0007B

INSPECTION PROCEDURE

1. CHECK SELF-DIAGNOSTIC RESULTS

Check the self-diagnostic results.

Self-diagnostic results
BATTERY VOLTAGE [ABNORMAL]

Is above displayed in the self-diagnosis item?

YES >> GO TO 2.
NO >> INSPECTION END

2. CHECK CONNECTOR

1. Turn ignition switch OFF and disconnect VDC/TCS/ABS control unit connector. Then reconnect it securely.
2. Perform self-diagnosis.

Do any self-diagnosis items appear?

YES >> GO TO 3.
NO >> Poor connection. Repair or replace connector.

3. CHECK VDC/TCS/ABS CONTROL UNIT POWER SYSTEM (1)

1. Turn ignition switch OFF and disconnect VDC/TCS/ABS control unit connector.
2. Turn ignition switch ON (but do not start engine). Check voltage between VDC/TCS/ABS control unit harness connector M93 and ground.

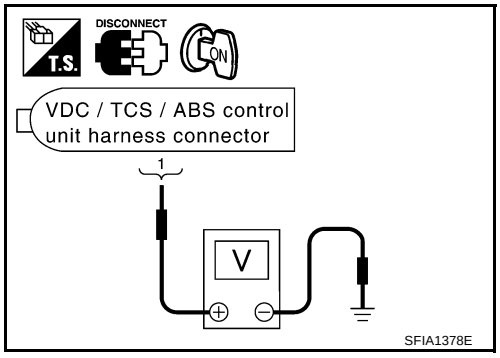

VDC/TCS/ABS control unit	Ground	Voltage
1	—	Battery voltage (Approx. 12V)

OK or NG

OK >> GO TO 4.
NG >> GO TO 5.

4. CHECK VDC/TCS/ABS CONTROL UNIT GROUND CIRCUIT

Turn ignition switch OFF and check VDC/TCS/ABS control unit ground circuit.

VDC/TCS/ABS control unit	Ground	Continuity
28, 29	—	Yes

OK or NG

OK >> Perform VDC/TCS/ABS control unit self-diagnosis again.
NG >> Poor installation of VDC/TCS/ABS control unit, or harness malfunction

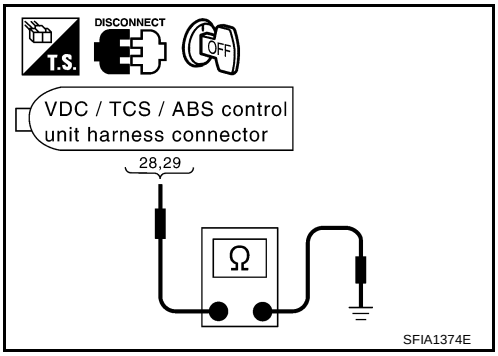

5. CHECK VDC/TCS/ABS CONTROL UNIT POWER SYSTEM (2)

1. Check fuse 10 A.
2. Check continuity between battery positive terminal and VDC/TCS/ABS control unit harness connector M93.

VDC/TCS/ABS control unit	Battery positive terminal	Continuity
1	—	Yes

OK or NG

OK >> Check for non-standard conditions in battery (terminal looseness, low voltage, etc.) And alternator.
NG >> ● Replace 10 A fuse.
● Open or short in harness.

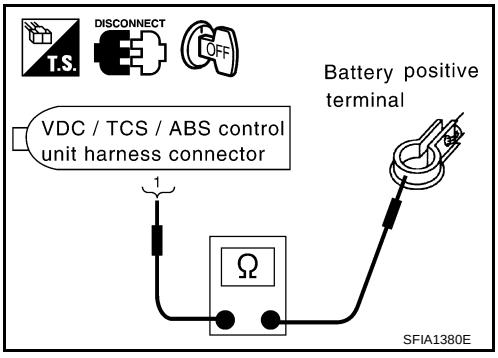

When “SHIFT POSITION ERROR” Appears in Self-Diagnostic results Display (A/T Models)

NFS0007C

INSPECTION PROCEDURE

1. CHECK SELF-DIAGNOSTIC RESULTS

Check the self-diagnostic results.

Self-diagnostic results
SHIFT POSITION ERROR

Is above displayed in the self-diagnosis item?

YES >> GO TO 2.
NO >> INSPECTION END

2. CHECK DATA MONITOR

1. Connect CONSULT-II and CONSULT-II CONVERTER to data link connector. Start engine.
2. In “DATA MONITOR” select “MAIN SIGNALS” and then check select lever position.

Select lever position	SLCT LVR POSI (data monitor)
P position	P
R position	R
D position	D

OK or NG

OK >> Perform VDC/TCS/ABS control unit self-diagnosis again.
NG >> GO TO 3.

3. CHECK A/T PARK/NEUTRAL POSITION SWITCH

Perform the A/T park/neutral position switch inspection. Refer to AT-107, "DTC P0705 PARK/NEUTRAL POSITION SWITCH" .

Do any self-diagnosis items appear?

YES >> Repair the indicated items and perform VDC/TCS/ABS control unit self-diagnosis again.
NO >> Perform VDC/TCS/ABS control unit self-diagnosis again.

VDC/TCS/ABS Control Unit 2

NFS0007D

INSPECTION PROCEDURE

1. CHECK SELF-DIAGNOSTIC RESULTS

Check the self-diagnostic results.

Self-diagnostic results
EMERGENCY BRAKE

When any item other than “EMERGENCY BRAKE” is indicated in self-diagnosis display, follow the instructions below.

CAUTION:
“EMERGENCY BRAKE” is displayed when a malfunction is detected in VDC/TCS/ABS control unit itself. If this display item appears, replace VDC/TCS/ABS control unit.

Is above displayed in the self-diagnosis item?

YES >> Replace VDC/TCS/ABS control unit, and perform self-diagnosis again.
NO >> INSPECTION END

Brake Fluid Level Switch System

NFS0007E

INSPECTION PROCEDURE

1. CHECK SELF-DIAGNOSTIC RESULTS

Check the self-diagnostic results.

Self-diagnostic results
BR FLUID LEVEL LOW

Is above displayed in the self-diagnosis item?

YES >> Check pad for wear. Check brake fluid for leakage.
NO >> GO TO 2.

2. CHECK CONNECTOR

1. Turn ignition switch OFF and disconnect brake fluid level switch connector and VDC/TCS/ABS control unit connector.
2. Reconnect connectors securely, then perform VDC/TCS/ABS control unit self-diagnosis again.

Does anything appear on self-diagnostic results display?

YES >> GO TO 3.
NO >> Poor connector connections. Repair or replace connectors.

3. CHECK HARNESS BETWEEN BRAKE FLUID LEVEL SENSOR AND VDC/TCS/ABS CONTROL UNIT

1. Turn ignition switch OFF and disconnect brake fluid level switch connector and VDC/TCS/ABS control unit connector.
2. Check continuity between brake fluid level switch harness connector E44 and VDC/TCS/ABS control unit harness connector M93.

VDC/TCS/ABS control unit	Brake fluid level switch	Continuity
40	1	Yes
	Ground	No
Ground	2	Yes

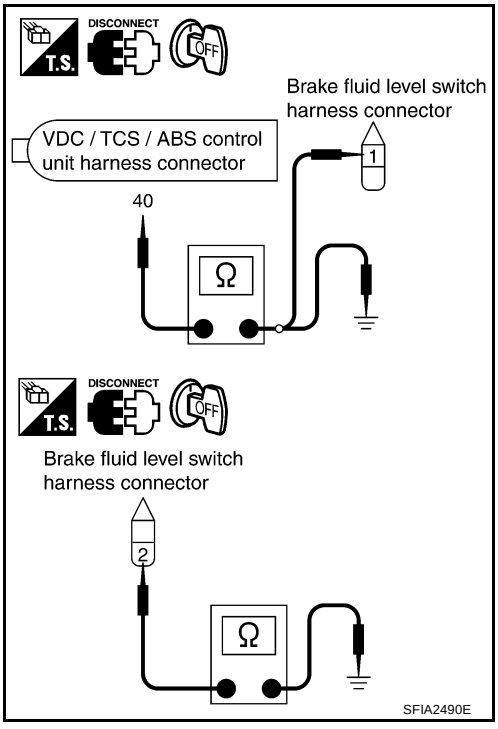

OK or NG

OK >> Connect connectors and perform a VDC/TCS/ABS control unit self-diagnosis.
NG >> If the open or short in harness, repair or replace harness.

RAS Control Unit System (With RAS)

NFS000IM

INSPECTION PROCEDURE

1. CHECK SELF-DIAGNOSTIC RESULTS

Check self-diagnosis results.

Self-diagnosis results
RAS CIRCUIT

Is above displayed on the self-diagnosis display?

YES >> GO TO 2.
NO >> INSPECTION END.

2. CHECK RAS CONTROL UNIT CIRCUIT

1. Perform RAS control unit self-diagnosis. Repair or replace items indicated, then perform RAS control unit self-diagnosis again. Refer to STC-23, "Self-Diagnosis" .
2. Perform VDC/TCS/ABS control unit self diagnosis.

OK or NG

OK >> INSPECTION END
NG >> ● Repair or replace malfunctioning components.
● Perform the self-diagnosis, and make sure that the result shows ″NO DTC IS DETECTED″.

CAN Communication Circuit

NFS0007F

INSPECTION PROCEDURE

1. CHECK CONNECTOR

1. Turn ignition switch OFF and disconnect VDC/TCS/ABS control unit connector and steering angle sensor connector. Check terminal for deformation, disconnection, looseness, and so on. If any malfunction is found, repair or replace terminal.
2. Securely reconnect connectors and perform self-diagnosis.

Self-diagnostic results
CAN COMM CIRCUIT
ST ANG SEN COM CIR

Is above displayed in the self-diagnosis item?

YES >> Print out self-diagnostic results and go to LAN-3, "Precautions When Using CONSULT-II" .
NO >> Connector terminal connection is loose, damaged, open or shorted.

Component Inspection

NFS0007G

VDC OFF SWITCH

- Turn ignition switch OFF and disconnect VDC OFF switch connector. Check continuity between terminal 1 and terminal 2.

1 - 2:

Pressing switch will establish continuity, releasing it will break continuity.

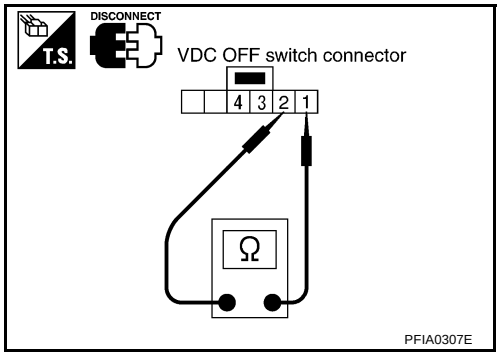

ABS MOTOR RELAY AND ACTUATOR RELAY

- Turn ignition switch OFF and disconnect the VDC relay box connector E47, E48, E222.
- Apply a voltage of 12V between the ABS motor relay terminal 8 and the actuator relay terminal 7 and then check the continuity between the following terminals.

ABS motor relay	Between terminal 4 to 10	Continuity should exist.
Actuator relay	Between terminal 9 to 16	Continuity should exist.

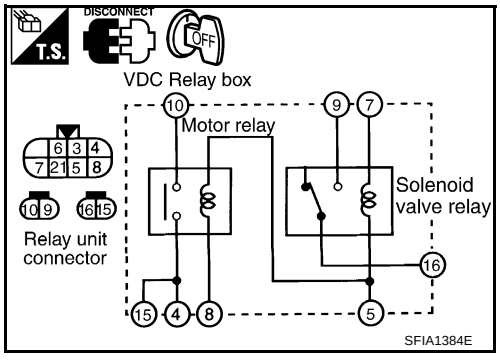

VDC/TCS/ABS ACTUATOR

Actuator Operation Inspection

1. Turn ignition switch OFF, apply a voltage of 12 V between VDC relay box connector E47 terminal 5 and 8, use an oscilloscope to measure motor voltage at this time (between terminal 4 and ground), and check motor reverse voltage occurrence time when operation is stopped.

Motor reverse voltage occurrence time:

0.1 second or more

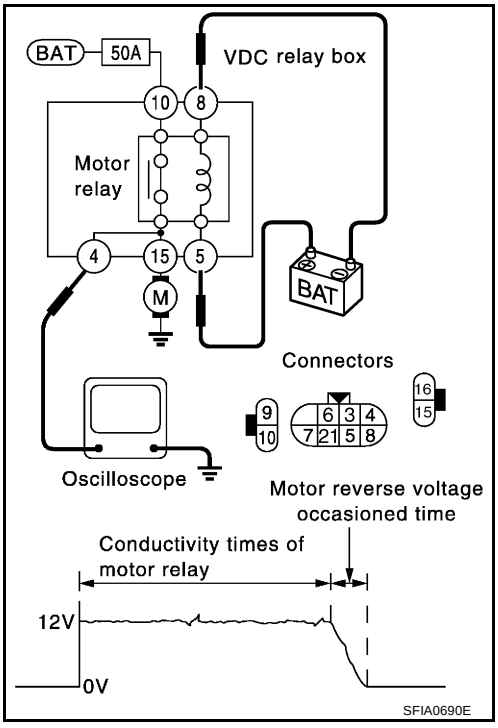

CAUTION:

- **Above check should be performed after motor relay unit inspection to make sure relay operates normally.**
- **To prevent overheating, do not drive actuator motor more than 4 seconds.**
- **Motor reverse voltage occurrence time is standard when battery voltage is 12 V and the air temperature is 20°C (68°F), and this time is a little shorter when battery voltage is low or the air temperature is low.**

TROUBLE DIAGNOSIS FOR SYMPTOMS

PFP:00007

Excessive ABS Function Operation Frequency

NFS000KF

1. CHECK START

Check brake force distribution.

OK or NG

OK >> GO TO 2.
NG >> Check brake system

2. CHECK FRONT AND REAR AXLE

Make sure there is no excessive play in the front and rear axles.

OK or NG

OK >> GO TO 3.
NG >> Repair.

3. CHECK WHEEL SENSOR

Wheel Sensor Inspection

- Wheel sensor mount and damage inspection
- Sensor rotor mount and damage inspection
- Wheel sensor connector connection inspection
- Wheel sensor harness inspection

OK or NG

OK >> GO TO 4.
NG >>
- Replace wheel sensor or sensor rotor.
- Repair harness.

4. CHECK ABS WARNING LAMP DISPLAY

Make sure the warning lamp turns off approximately 1 sec. After the ignition switch is turned on or when driving.

OK or NG

OK >> Normal
NG >> Perform self-diagnosis. Refer to BRC-26, "Self-Diagnosis" .

Unexpected Pedal Reaction

NFS000KG

1. CHECK BRAKE PEDAL STROKE

Check brake pedal stroke.

Is the stroke too big?

YES >>
- Bleed air from the brake piping.
- Check the brake pedal, brake booster, and master cylinder mount for play, looseness, and brake system for fluid leaks, etc. If any malfunctions are found, make repair.

NO >> GO TO 2.

2. CHECK FUNCTION

Disconnect the VDC/TCS/ABS control unit connector and make sure the braking force is sufficient when the ABS in not operating. After the inspection, reconnect the connector.

OK or NG

OK >> GO TO 3. CHECK WHEEL SENSOR in BRC-54, "Excessive ABS Function Operation Frequency" .
NG >> Check brake system.

The Braking Distance Is Long

NFS000KH

CAUTION:
On slippery road surfaces, the stopping distance might be longer with the ABS operating than when the ABS is not operating.

1. CHECK FUNCTION

Disconnect VDC/TCS/ABS control unit connector to deactivate ABS. In this condition, check stopping distance. After inspection, connect connector.

OK or NG

OK >> GO TO 3. CHECK WHEEL SENSOR in BRC-54, "Excessive ABS Function Operation Frequency".

NG >>
- Bleed air from the brake piping.
- Check brake system.

The ABS Function Does Not Operate

NFS000KI

CAUTION:
The ABS does not operate when the speed is 10 km/h (6 MPH) or less.

1. CHECK ABS WARNING LAMP DISPLAY

Make sure the warning lamp turns off approximately 1 second after the ignition switch is turned on or when driving.

OK or NG

OK >> GO TO 3. CHECK WHEEL SENSOR in BRC-54, "Excessive ABS Function Operation Frequency".

NG >> Perform self-diagnosis. Refer to BRC-24, "CONSULT-II Functions (VDC/TCS/ABS)".

Pedal Vibration or ABS Operation Sound Occurs

NFS000KJ

CAUTION:
Under the following conditions, when brake pedal is lightly depressed (just place a foot on it), ABS is activated and vibration is felt. However, this is normal.

- **When shifting gears**
- **When driving on slippery road**
- **During cornering at high speed**
- **When passing over bumps or grooves [50 mm (1.97 in) or more]**
- **When pulling away just after starting engine (at approximately 10 km/h (6MPH) or higher)**

1. SYMPTOM CHECK 1

Check if pedal vibration or operation sound occurs when the engine is started.

OK or NG

OK >> GO TO 2.
NG >> Perform self-diagnosis. Refer to BRC-26, "Self-Diagnosis" .

2. SYMPTOM CHECK 2

Check symptom when electrical component (headlamps, etc.) Switches are operated.

Does the symptom occur when the electrical component (head lamp, etc.) Switches are operated?

YES >> Check if there is a radio, antenna, antenna lead wire, or wiring close to the control unit (or its wiring), and if there is, move it farther away.
NO >> GO TO 3. CHECK WHEEL SENSOR in BRC-54, "Excessive ABS Function Operation Frequency" .

Vehicle Jerks During VDC/TCS/ABS Control

NFS000KK

1. CHECK ENGINE SPEED SIGNAL

Conduct CONSULT-II VDC/TCS/ABS control unit “Data Monitor”.

Is engine speed at idle 400 rpm or higher?

YES >> GO TO 3.
NO >> GO TO 2.

2. CHECK ECM SELF-DIAGNOSIS RESULT ITEM

Perform ECM self-diagnosis.

Are self-diagnosis items displayed?

YES >> Check the corresponding items. Refer to EC-83, "TROUBLE DIAGNOSIS" in “Engine Control (EC section)”.
NO >> GO TO 3.

3. SYMPTOM CHECK 1

Check if the vehicle jerks during VDC/TCS/ABS control.

OK or NG

OK >> INSPECTION END
NG >> GO TO 4.

4. CHECK A/T SELF-DIAGNOSIS RESULTS ITEM

Perform A/T self-diagnosis.

OK or NG

OK >> GO TO 5.
NG >> Check the corresponding items. Refer to AT-42, "TROUBLE DIAGNOSIS" in “A/T”.

5. SYMPTOM CHECK 2

Check if the vehicle jerks during VDC/TCS/ABS control.

OK or NG

OK >> INSPECTION END
NG >> GO TO 6.

6. CHECK SELF-DIAGNOSIS RESULT ITEM 1

Conduct self-diagnosis of the VDC/TCS/ABS control unit.

Are self-diagnosis items displayed?

YES >> Check the corresponding items, make repairs, and re-conduct the VDC/TCS/ABS control unit self-diagnosis.
NO >> GO TO 7.

7. CHECK CONNECTOR

1. Disconnect the VDC/TCS/ABS control unit and the ECM connectors, check the terminals for deformation, disconnection, looseness, and so on. If there is an error, repair or replace the connector.
2. Securely reconnect the connector and conduct self-diagnosis.

OK or NG

OK >> If the connector terminal contact is loose, damaged, open or shorted, repair or replace the connector terminal.
NG >> GO TO 8.

8. CHECK SELF-DIAGNOSIS RESULT ITEM 2

Re-conduct the VDC/TCS/ABS control unit self-diagnosis.

Are self-diagnosis items displayed?

YES >> Repair or replace any non-standard items.
NO >> GO TO 9.

9. CHECK CIRCUIT BETWEEN VDC/TCS/ABS CONTROL UNIT AND THE ECM

Check CAN communication system. Refer to BRC-52, "CAN Communication Circuit" .

OK or NG

OK >> INSPECTION END
NG >> Connect the connectors, and re-conduct the VDC/TCS/ABS control unit self-diagnosis.

WHEEL SENSOR

PFP:47910

Removal and Installation

NFS0007P

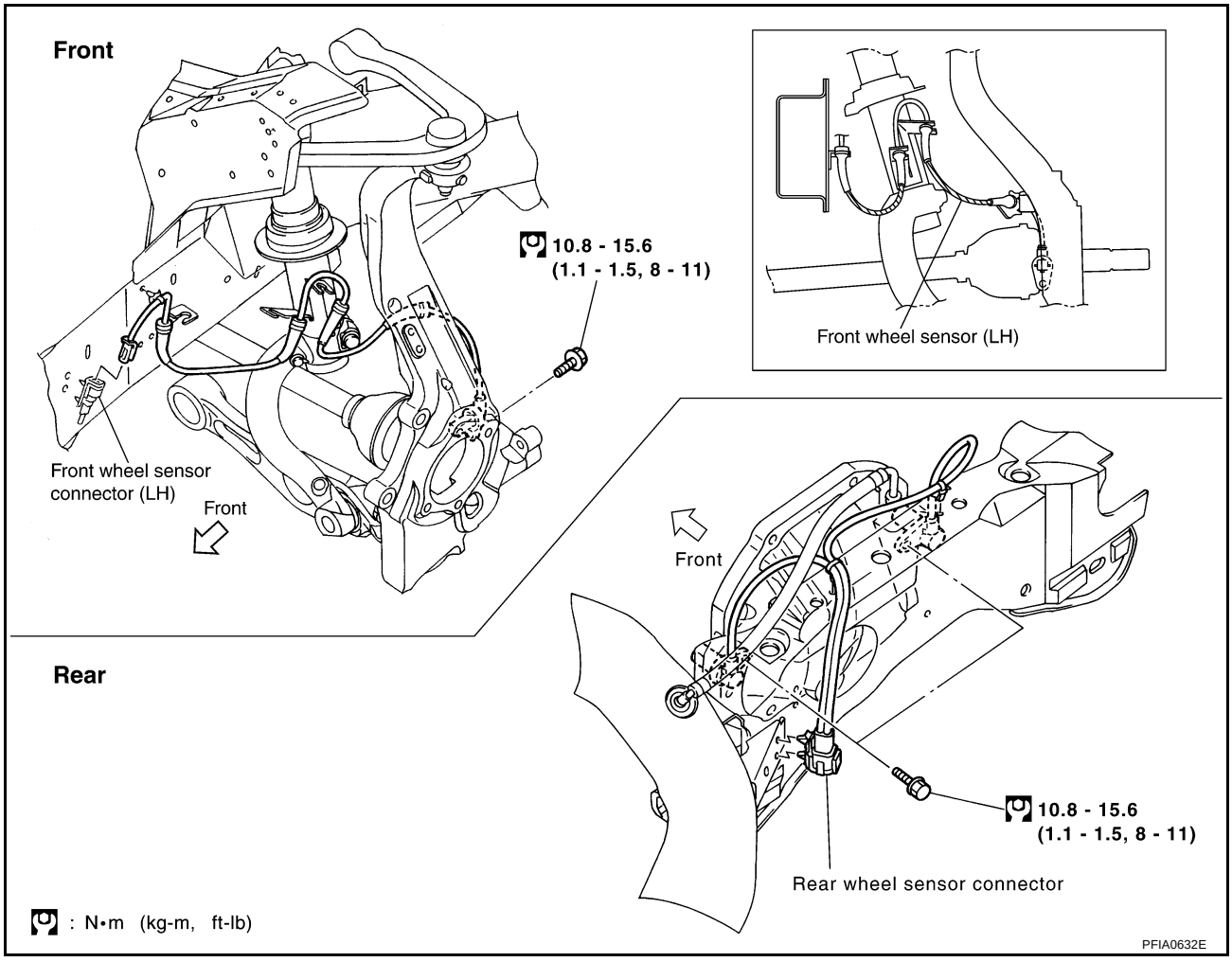

REMOVAL

Pay attention to the following when removing sensor.

CAUTION:

- **As much as possible, twisting sensor harness when removing it. Pull sensors out without pulling on sensor harness.**
- **Take care to avoid damaging sensor edges or rotor teeth. Remove wheel sensor first before removing front or rear wheel hub. This is to avoid damage to sensor wiring and loss of sensor function.**

INSTALLATION

Pay attention to the following when installing wheel sensor. Tighten installation bolts to specified torques.

- When installing, make sure there is no foreign material such as iron chips on pick-up and mounting hole of sensor. Make sure no foreign material has been caught in sensor rotor motor. Remove any foreign material and clean mount.
- When installing front wheel sensor, be sure to press rubber grommets in until they are held at the three locations shown in the figure (2 at shock absorbers and 1 at body panel). When installed, harness must not be twisted. White line on harness (shaded part) must be visible from front.

VDC/TCS/ABS CONTROL UNIT

PFP:47660

Removal and Installation

NFS0007Q

REMOVAL

1. Remove instrument side panel (RH). Refer to IP-15, "(U) Instrument Side Panel (RH/LH)" .
2. Remove instrument lower cover. Refer to IP-14, "(S) Instrument Lower Cover" .
3. Remove VDC/TCS/ABS control unit.

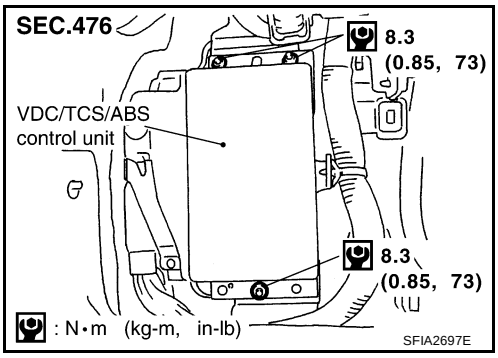

INSTALLATION

Installation is the reverse order of removal.

SENSOR ROTOR

PFP:47970

Removal and Installation

NFS0007R

REMOVAL

CAUTION:
Never reuse sensor rotor.

Front

- Sensor rotor cannot be disassembled. Remove the sensor rotor as of being integrated to hub bearing assembly. Refer to FAX-4, "REMOVAL" .

Rear

- Follow procedure below to remove rear sensor rotor.
  - Remove side flange. Refer to RFD-15, "SIDE OIL SEAL" .
  - Using a bearing replacer (suitable tool) and puller (suitable tool), remove sensor rotor from side flange.

INSTALLATION

Front

- Sensor rotor cannot be disassembled. Remove the sensor rotor as of being integrated to hub bearing assembly. Refer to FAX-6, "INSTALLATION" .

Rear

- Follow procedure below to install rear sensor rotor.
  - Using a drift (SST), press rear sensor rotor onto side flange.
  - Install side flange. Refer to RFD-15, "SIDE OIL SEAL" .

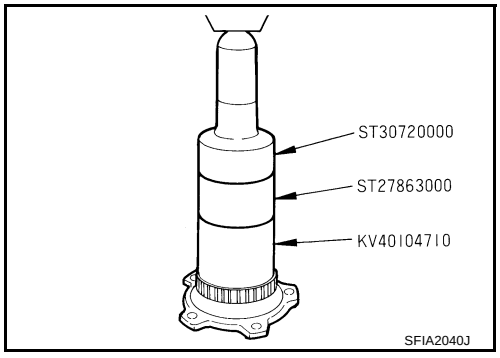

VDC/TCS/ABS ACTUATOR

PFP:47660

Removal and Installation

NFS0007S

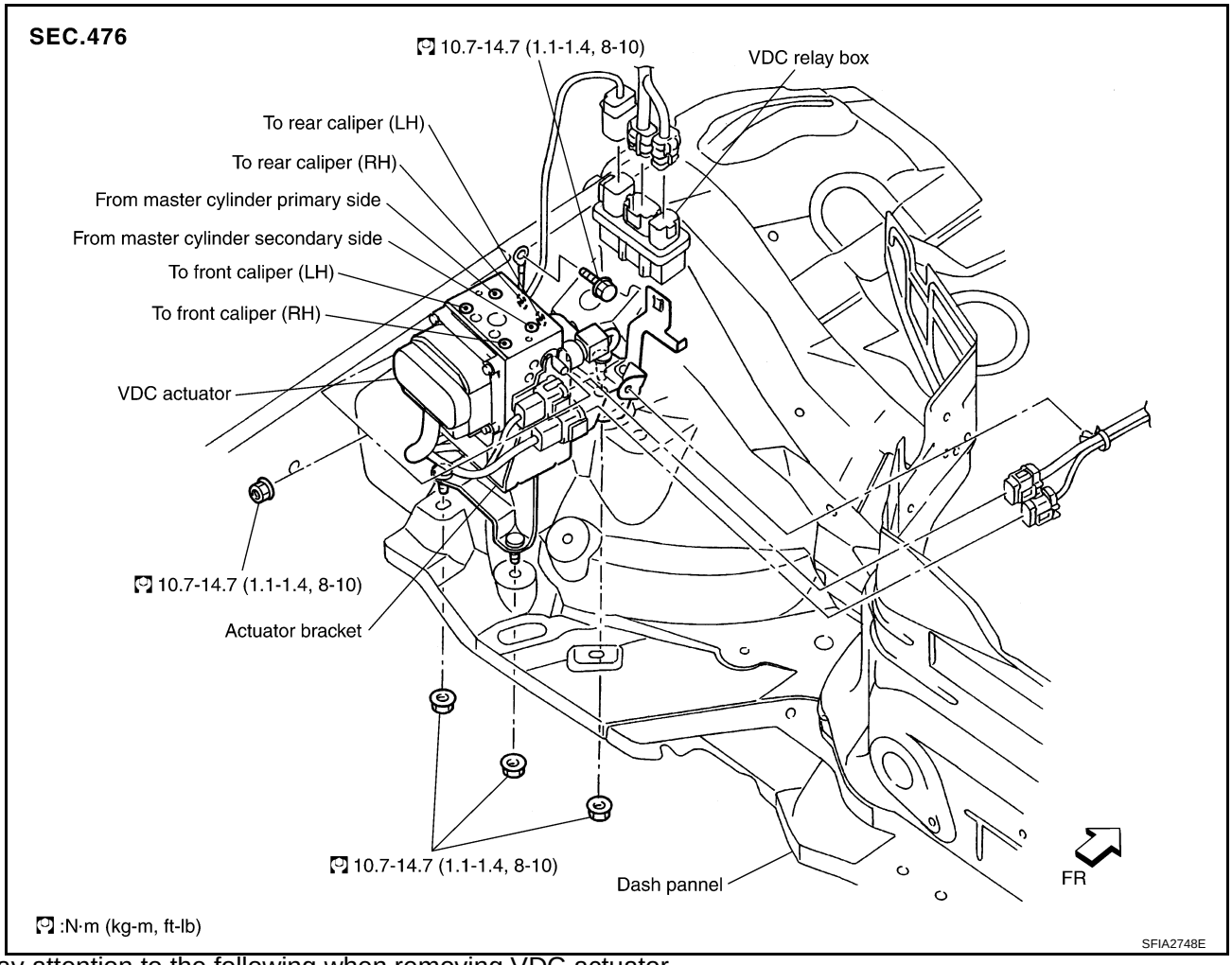

Pay attention to the following when removing VDC actuator.

CAUTION:

- **Before servicing, disconnect the battery cable from the negative terminal.**
- **To remove brake tube, use a flare nut wrench to prevent flare nuts and brake tube from being damaged. To install, use a flare nut crowfoot and torque wrench (commercial service tool).**
- **Do not remove and install VDC actuator by holding harness.**
- **After work is completed, bleed air from brake piping. Refer to BR-10, "Bleeding Brake System" .**
- **Be sure to securely connect the battery cable to the negative terminal.**

G-SENSOR

PFP:47930

Removal and Installation

NFS0007T

REMOVAL

A/T Model

1. Remove center console. Refer to IP-15, "(Y) Center Console Assembly" .
2. Disconnect harness connector.
3. Remove installation bolts. Remove yaw rate/side G sensor.

CAUTION:

- **Do not drop or strike yaw rate/side G sensor, because it has little endurance to impact.**
- **Do not use power tool etc., because yaw rate/side G sensor is sensitive for the impact.**

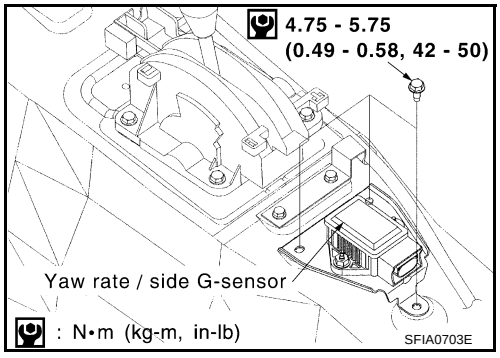

M/T Model

1. Remove center console. Refer to IP-15, "(Y) Center Console Assembly" .
2. Disconnect harness connector.
3. Remove installation bolts. Remove yaw rate/side G sensor.

CAUTION:

- **Do not drop or strike yaw rate/side G sensor, because it has little endurance to impact.**
- **Do not use power tool etc., because yaw rate/side G sensor is sensitive for the impact.**

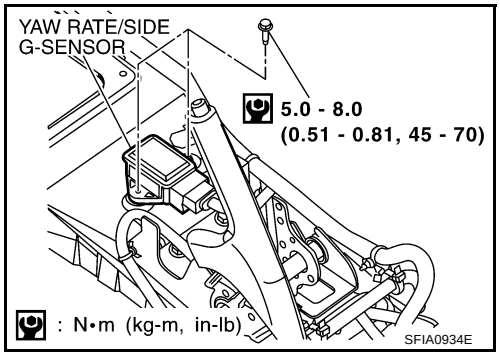

INSTALLATION

Installation is in the reverse order of removal.

CAUTION:

- **Do not drop or strike yaw rate/side G sensor, because it has little endurance to impact.**
- **Do not use power tool etc., because yaw rate/side G sensor is weak for the impact.**

STEERING ANGLE SENSOR

PFP:25554

Removal and Installation

NFS0007U

REMOVAL

1. Remove spiral cable assembly. Refer to SRS-44, "SPIRAL CABLE" .
2. Remove steering angle sensor from spiral cable assembly.

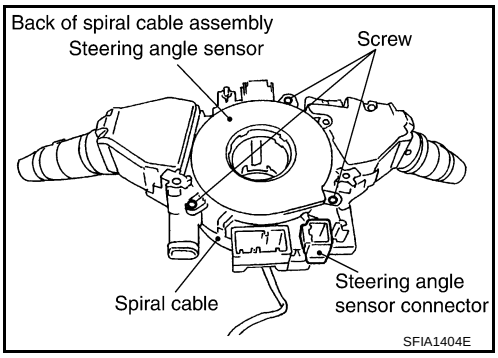

INSTALLATION

Installation is in the reverse order of removal.

NOTE:

After work, make sure to adjust neutral position of steering angle sensor. Refer to BRC-6, "Adjustment of Steering Angle Sensor Neutral Position" .